WOODSIDE PLANTATION

PROPERTY OWNERS'

ASSOCIATION

BUILDING AND LANDSCAPE GUIDELINES

Revised: October 2026

TABLE OF CONTENTS

		Page
0.	**Introduction**	
0.1	Summary of Building Landscape Guidelines	9
0.2	Purpose and Authority of Covenants and Guidelines	9
0.3	Definition of Terms	10
1.	**General Guidelines**	14
1.1	Architectural Design	14
1.1.1	Building Design Criteria	14
1.1.2	Composition	14
1.1.3	Building Form	15
1.1.4	Building Size	15
1.1.5	Lot Coverage	15
1.1.6	Garages/Parking/Driveways	15
1.1.7	Service Areas	16
1.2	Building Materials	16
1.2.1	Exterior Walls	17
1.2.2	Roofing	17
1.2.3	Windows	17
1.2.4	Open Areas (decks, porches, carports etc.)	18
1.2.5	Materials Colors	18
1.3	Site Design	18
1.3.1	Base Information	18
1.3.2	Composition	18
1.3.3	Materials	18
1.3.4	Storm Water Drainage & Water Run Off Control	19
1.3.5	Street Gutter Obstructions & Curb Cutting	20
1.3.6	Walkway & Driveway Concrete Coloring	21
1.3.7	Site Design Colors	21
1.3.8	Road Right-of-Way & Easements	21
1.3.9	Retaining, Sitting, Decorative & Privacy Walls	21
1.3.10	Lake Water for Private Irrigation	22
1.3.11	Golf Course Softening	22
1.3.12	Street Trees	22
1.3.13	Existing Homesites Tree Protection & Removal	23
1.3.14	Lot Clearing & Grubbing of Undeveloped Lots	24
1.3.15	Wetlands & Waters of the State	24

TABLE OF CONTENTS

		Page
1.4	Appurtenances	25
1.4.1	Statues & Ornamentals, Play Equipment & Other Structural Items	25
1.4.2	Decks	27
1.4.3	Swimming Pools	28
1.4.4	Pool Houses	28
1.4.5	Hot Tubs	28
1.4.6	Swim Spas	29
1.4.7	Out Buildings	30
1.4.8	Outdoor Firepits and Fire Places	30
1.4.9	Fences	30
1.4.10	Putting Greens	32
1.5	Other General Guidelines	33
1.5.1	House Numbers	33
1.5.2	Exterior Lighting	33
1.5.3	Solar Energy Systems	33
1.5.4	Mailboxes	34
1.5.5	Boat Storage	35
1.5.6	Lightening Suppression Systems	35
1.5.7	Satellite Antennas	35
1.5.8	Inflatables	36
1.5.9	Window Air Conditions & Fans	36
1.5.10	Yard Signs	36
1.5.11	Real Estate Signage	36
1.5.12	Real Estate Information Platform	37
1.5.13	Under Contract Signage	37
1.6	Variances	37
1.6.1	Variances will not be granted for the following	38
1.7	Landscaping & Hardscapes	39
1.7.1	General Requirements (of landscape & hardscapes)	39
1.7.2	Drainage	41
1.7.3	Plants	41

TABLE OF CONTENTS

		Page
1.7.4	Screening & Softening	42
1.7.5	Sod & Ground Cover	42
1.7.6	Landscaping Beyond Property Lines	43
1.8	Golf Fairway Residential Areas	43
1.9	Undeveloped Lots	44
2.	New Construction Guidelines	44
2.1	Submission & Review Requirements	44
2.1.1	Submission Fee & Deposit	45
2.1.2	Site & Tree Stake Out	45
2.1.3	Dimensioned Site Plan	46
2.1.4	Elevations	47
2.1.5	Floor Plans	47
2.1.6	Color Sample	47
2.1.7	Construction Application	47
2.1.8	Plan & Design Modifications	48
2.2	Meeting Attendance	48
2.2.1	Meeting Materials	48
2.3	Project and Building Responsibility and Completion	48
2.3.1	Building Permit Expiration	49
2.3.2	New Home Construction Lot Signs	49
2.3.3	General Regulations	49
2.3.4	Work Hours	50
2.3.5	Clearing/Grubbing for New Construction	50
2.3.6	Tree Protection and Removal for New Construction	51
2.4	Pre-Construction	52
2.5	During Construction	53
2.6	New Construction Landscaping	54

TABLE OF CONTENTS

		Page
2.6.1	Deposit	55
2.6.2	Plans	55
2.6.3	Drainage Plan	57
2.7	Post Construction	58
2.8	Construction Inspections	58
2.8.1	General Inspection Process	58
2.8.2	Lot Stake Out Inspection	58
2.8.3	Tree Inspection	58
2.8.4	Foundation Lay Out Inspection	58
2.8.5	During Construction Inspection	58
2.8.6	Landscape Site Inspections	58
2.8.7	Final Inspection	59
2.9	New Construction Dwelling & Site Design	59
2.9.1	Gutters	59
2.9.2	Soil Erosion Control	59
2.10	Other Special Restrictions Affecting Building Contractor	60
2.10.1	Fines Schedule	60
2.10.2	Construction/Job Site Signs	60
2.10.3	Burning	60
3.	Existing Home Improvement & Alterations	61
3.1	Improvement & Alterations Process	62
3.1.1	Letter of Intent (Improvement Review Form)	62
3.1.2	Completed Improvement Review Form	62
3.1.3	Site Plan	62
3.1.4	Drawings	62
3.1.5	Color Samples	62
3.1.6	Fees and Deposit Schedule for Improvements	63
3.1.7	Fines Schedule	63
3.2	Landscape Improvements	64
3.3	Improvement Site Inspections	64

TABLE OF CONTENTS

		Page
4.	Reserved	65
5.	Specific Guidelines by Community	66
5.0	Guidelines to all homesites in Phases I & II that are not otherwise specifically listed	66
5.1	Patio "Privacy" Homesites to include: Juniper Loop, Sweet Gum Lane, Sweet Gum Ct., Crane Ct. and Baldcypress Ct., Hunter's Run and Hackberry Lane (Phase II, no privacy wall)	66
5.2	Cottage Homesites - Boxwood Road	68
5.3	Magnolia Lake Estates: Magnolia Lake Court, Magnolia Lake Lane and Magnolia Lake Road	69
5.4	Charles Towne Place	69
5.5	Eagles Nest - Eagles Nest Lane & Willow Oak Loop	71
5.6	Longwood Green Court & Short Iron Drive	71
5.7	Club Villas - Club Villa Drive West & Club Villa Drive East	72
5.8	Cottonwood Creek – Cottonwood Creek Lane & Popular Hill Court	72
5.9	The Fairways - Double Eagle Court	73
5.10	Forest Pines – Forest Pines Road	73
5.11	Fox Trace Court & Huntington Court	74
5.12	Spalding Lake Circle	74
5.13	Holley Ridge Road	75
5.14	Forest Ridge – Forest Ridge Drive	75
5.15	Forest Bluffs – Forest Bluffs Road	76
5.16	Glen Haven – Glen Haven Circle	76

Page

5.17 Oakman's Bluff- Birch Tree Circle, Holley Ridge Road, River Birch Road & White Birch Court 77

5.18 The Overlook – Spaulding Bridge Road, Bridle Lane, Foxhound Run (Lots 2-21, 22A & 24-67) & Steeplechase Road (Lots 1A-1 – 1A-9, 1 & 73-77) 77

5.19 Belmont Bluffs - East Pleasant Colony Drive, Storm Song Court, Summer Squall Lane, Trippi Lane & Woodside Plantation Drive (Lots 86 - 92 & 123) 78

5.20 Cedar Ridge - Red Cedar Road, Tulip Popular Court & White Cedar Way 78

5.21 West Pleasant Colony – West Pleasant Colony Drive & Periwinkle Court, Steeplechase Road (Lots 262, 263 & 269) 79

5.22 Bellewood – Bellewood Drive 81

5.23 The Enclave – Enclave Drive & Highland Reserve Court 82

5.24 The Oaks – Golden Oak Drive 86

5.25 The Pointe – Bridge Crest Court & Crescent Pointe 87

5.26 Grand Haven – Pink Dogwood Circle 88

5.27 Steeplechase Reserve – Steeplechase Road (Lots 101-121) 88

5.28 Ridge Oak Heights – Quiet Oak Court 89

5.29 Longmeadow – Commonwealth Way, Quiet Oak Court (Lot 307), Sterling Grove Circle (Lots 301-306, 309-310 & 342-349), Summer Winds Circle (Lot 308) & Steeplechase Road (Lot 350) 90

5.30 Meadowbrook Estates – Anderson Mill Road (Lots 601-620 & 10-1 – 10-14, 10C 15 & 16) & Barbaro Court 91

5.31 Grassy Creek – Grassy Creek Lane & Steeplechase Road (Lots 9.1 – 9.5 & 9A- 27 – 9A-31) 92

5.32 Silver Meadow – Silver Meadow Court 93

Page

5.39 The Meadows – Phase IV, Section 8, Lots 801-832, Bluet Loop, Whimbrel Loop, Evenwillow Way 100

5.40 The Highlands – Balfour Court, Earlston Alley, Glenlevit Drive, and Thornhill Drive 101

5.41 Longmeadow Section 3B – Commonwealth Way (Lots 1 through 24) 104

5.42 True Cedar Way 105

5.43 Oakman's Bluff (Lots 26B-1 to 26B-14) 107

5.44 Bristlecone Ridge (Bristlecone Drive Lots 518-613, Chrysalis Bend, Papillon Loop) 108

5.45 Summer Hill (Summer Winds Extension) (Summer Winds Circle – Lots 15-3 – 15-27; Beauty Berry Way – Lots 1-35) 110

5.46 Highpoint - Kirkwall Court – Lots 17-1 through 17-17 111

5.47 The Peninsula 113

5.48 Stonebridge Villas 115

6 Appendix's 118-134

0. Introduction

0.1 Summary of Building Landscape Guidelines: The Building & Landscaping Guidelines (BLG) is divided into sections dependent upon the type of submission you are making.

- **Section 1.** General guidelines used for the various types of improvements that are often made, on both new and existing properties and are applicable to all of Woodside Plantation unless otherwise noted.
- **Section 2.** Requirements for all new construction from the application process to the final inspections.
- **Section 3.** Existing home requirements for alterations and improvements from the submission process to the completion.
- **Section 4**. Reserved
- **Section 5.** Specific setback and requirements of sections of Woodside Plantation.
- **Section 6.** Appendixes, checklist and specification sheets. *It is required to use the checklist associated with various project types to ensure accurate and complete submissions and to help avoid delays in approvals.*

0.2 Purpose and Authority of Covenants and BLG: The Woodside Plantation Covenants dated September 5, 1986 and its amendments establish the basis for construction of new homes, modifications, and landscaping in the Woodside Plantation and apply to all builders and residents. The Covenants established a Woodside Development Company Architectural Review Board (WD – ARB) and provide that the Woodside Development Company transfer Architectural Review Authority to the Woodside Plantation Property Owners Association Architectural Review Board (POA – ARB) under the control of the Woodside Plantation Property Owners Association (WPPOA) when 65% of the lots within a phase or section have received a Certificate of Occupancy.

The primary purpose of the Covenants and BLG is to foster the creation of a community which is aesthetically pleasing and functionally convenient for residents and visitors. These BLG apply to residential lots/homesites that have been platted and recorded within Woodside Plantation. **All proposed homes, homes under construction, and existing homes must be built and maintained in a manner conforming to the Covenants and BLG.** The BLG have been written to clarify and expand on the Covenants. The Covenants take precedence over the BLG. Changes to the Covenants require a vote of Woodside Plantation property owners while changes to the BLG require approval by the two ARBs (Architectural Review Boards). Changes to the Building and Landscape Guidelines must be approved at a formal WPPOA public meeting and formal WD-POA meeting to ensure changes are retained in permanent Association records.

ARB Authority, General Prudential Rule. It is clearly the intent of the Covenants and Building Guidelines that all improvements to property or sites within Woodside Plantation, whether new construction, modifications, structures, landscaping or appurtenances, must be reviewed and approved by the appropriate ARB. "Appurtenances" is a broad category which includes items considered ornamental or recreational in nature.

*The fact that an i*tem or circumstance is not specifically addressed in the

Covenants or BLG does not allow exemption from this requirement. The Covenants *specifically do not establish extensive objective standards but rather vest authority in the ARBs to implement the Covenants and BLG, given the broad objectives of Article 1, Section 3(b) specified in the Covenants.*

Approval of Architectural, Siting, Landscaping and other building plans shall be dated and shall not be effective for construction commenced more than twelve (12) months after such approval unless a different expiration is specifically stated in the approval. (Covenants Article 1, Section 3 (f). This applies to new construction and modifications.

All changes to approved plans which occur during execution of a project must be submitted to the ARB for approval. It should be noted that while an individual change may be considered minor, an accumulation of these minor changes may, in fact, create a significant change. Builders are therefore encouraged to advise the appropriate ARB of any change, no matter how minor, at the earliest opportunity rather than waiting for final inspection. Failure to submit any construction modifications will results in deductions from the construction deposit return.

0.3 Definition of Terms: The following terms are defined in an effort to clarify the term as it relates to the Woodside Plantation Building & Landscape Guidelines.

- **Building & Landscape Guidelines (BLG)**
- **Access Easement:** The area which the Owner of a privacy wall will have reasonable access to properly maintain their property.
- **Accessory Structure**: A structure which is incidental to that of a principal building on the same building lot.
- **Architectural Review Board (ARB)**: There are two Architectural Review Boards referred to as the ARB or ARBs. One is appointed by the Development Company and the other is appointed by the Woodside Plantation Property Owners Association. See section 0.2 for more information.
- **Appurtenances**: A broad range category which includes items considered ornamental or recreation in nature.
- **Association:** The Woodside Plantation Property Owners' Association, Inc., a South Carolina non-profit corporation.
- **Buffer Area:** Open spaces, landscaped areas, fences, walls, berms or any combination thereof used to physically separate or screen one use or property from another so as to shield or block noise, lights or other nuisances.
- **Buildable Area**: The area of the lot, within the building setbacks, on which building is permitted, to include all structure above ground level.
- **Certificate of Occupancy (CO)**: A document issued by the City of Aiken that certifies that a building is safe for habitation and complies with all applicable building codes, zoning laws and safety standards.
- ***Common Properties:*** All real and personal property now or hereafter owned by the Association for the common use and enjoyment of the owners.
- **Company:** Woodside Development Limited Partnership, a South Carolina Limited Partnership or its successors.
- **Easement:** Easements are portions of property with various restrictions. These can be city easements (e.g. for underground utilities, etc.). They can be Development

Company easements (e.g. for buffer space, etc.) These easements may or may not

be on an individual homesite and may or may not be subject to building restrictions.

- **Existing Home:** Once the home is occupied, all improvements thereafter, are accomplished through the POA - ARB.
- **Gazebo:** A permanent open-sided, free-standing, solid roofed structure with four or more open sides and no permanent walls.
- **Guaranteed Views:** The range of view parallel to side property lines.
- **Hardscape:** refers to hard landscape materials and structures that are permanently incorporated into a landscape. Typical hardscape items include paved areas, patios, driveways, retaining walls, stairs, walkways, ponds, fountains, sitting and knee walls, gazebos, pergolas, and other items made of hard wearing materials such as wood, stone, concrete, plastic, and vinyl.
- **Landscaping:** Landscape is considered to be the grading, plantings ground cover, lighting and hardscape as part of landscape design.
- **Lots:** There are four types of lots: (See Lot Diagrams that follow)
    - Interior Lot: The most common type, this lot is situated between two other properties and fronts a single street. An interior lot has two side yards, one rear yard, and one front yard.
    - Corner Lot: Is a lot fronting onto two streets which intersect each other at the boundaries of the lot. A corner lot has one side yard or (possibly two) on an angled house, one rear yard, and two front yards.
    - Through Lot: Shall mean a lot fronting on two streets which do not intersect each other at the boundaries of the lot. A through lot shall have two side yards and two front yards. The principal front yard shall be designated on the approved site plan, subdivision map or individual plot plan. The secondary front yard would only be considered a front yard for the distance established by the front yard setback required for that community. The area between the rear of the building to the line established by the front yard setback would be considered a rear yard in all aspects, including fencing.
    - Undeveloped Lot: A lot owned by the Development Company or a private property owner that is covered with natural vegetation and where construction activities have not begun.
- **Lot Coverage:** Lot coverage refers to the total square footage of all improvements covering the ground surface, (e.g. house, driveway, patio, deck, sidewalk, etc.) described as a percentage of the total area of the lot.
- **Lot Line:** The actual property boundaries as shown on the recorded plat.
- **Minimum Building Lines (MBL):** The front, side and rear setback lines that create an area of a lot on which the dwelling and any above ground structures can be placed.
- **Natural Areas:** Areas of the undeveloped lot that will not be altered in any way during construction and subsequent landscaping.
- **Pergola:** A permanent open-sided structure with open/slatted roof.
- **Platted and Recorded Lots/Homesites:** Residential lots/homesites that have been approved by the proper zoning authorities and recorded in the Register of Mesne Conveyances offices in the City/County of Aiken, South Carolina.
- **Pool House:** A permanent building or structure designed to support swimming pool use and enhance the outdoor living experience.

- **Road Right-of-Way (ROW):** Typically, the width of the road right-of-way includes not only the road and curb but some additional distance on either side extending to the lot lines.
- **Service Area:** Any yard area used for garbage or trash containers, or for the location of mechanical equipment, like HVAC units or pool equipment, that is accessory to the principal building or use.
- **Setback Line:** That line that is the required minimum distance from the street ROW line or any other lot line that establishes the area within which the principal structure must be constructed or placed. A setback line shall also apply to any accessory structure.
- **Softscape:** the horticultural elements of a landscape.
- **Woodside Plantation Design Guidelines:** This document is written for the purpose of establishing design parameters that encourage the continuation of creative design commensurate with the quality of design established in the Woodside Plantation Land Use Plan.
- **Working Agreement Letter:** The Development Company and the Woodside Plantation Property Owners Association will from time to time create or change an agreement letter that will detail how the two organizations will work together or handle specific issues.
- **YARDS:** There are three principal types of yards surrounding a home:
    - **Front yard*:*** Shall mean that portion of the lot situated between any street right- of-way and a second line drawn parallel to the portion of the principal building located closest to the street; the front yard shall extend across the entire lot.
    - **Side Yard*:*** Shall mean that portion of the lot which is not a front yard or a rear yard and which is also not occupied by the principal building(s).
    - **Rear Yard:** Shall mean that portion of the lot situated between the rear building line of the principal building, which is the line drawn parallel to the front building line and passing through the rearmost portion of the principal building(s) and the rear lot line. The rear yard shall extend across the entire lot except that on a corner lot, the designated rear yard shall extend only to the intersecting front yard.
    - **Through Lot:** Shall mean a lot fronting on two streets which do not intersect each other at the boundaries of the lot. A through lot shall have two side yards and two front yards. The principal front yard shall be designated on the approved site plan, subdivision map or individual plot plan. The secondary front yard would only be considered a front yard for the distance established by the front yard setback required for that community. The area between the rear of the building to the line established by the front yard setback would be considered a rear yard in all respects, including fencing.

LOT ILLUSTRATIONS

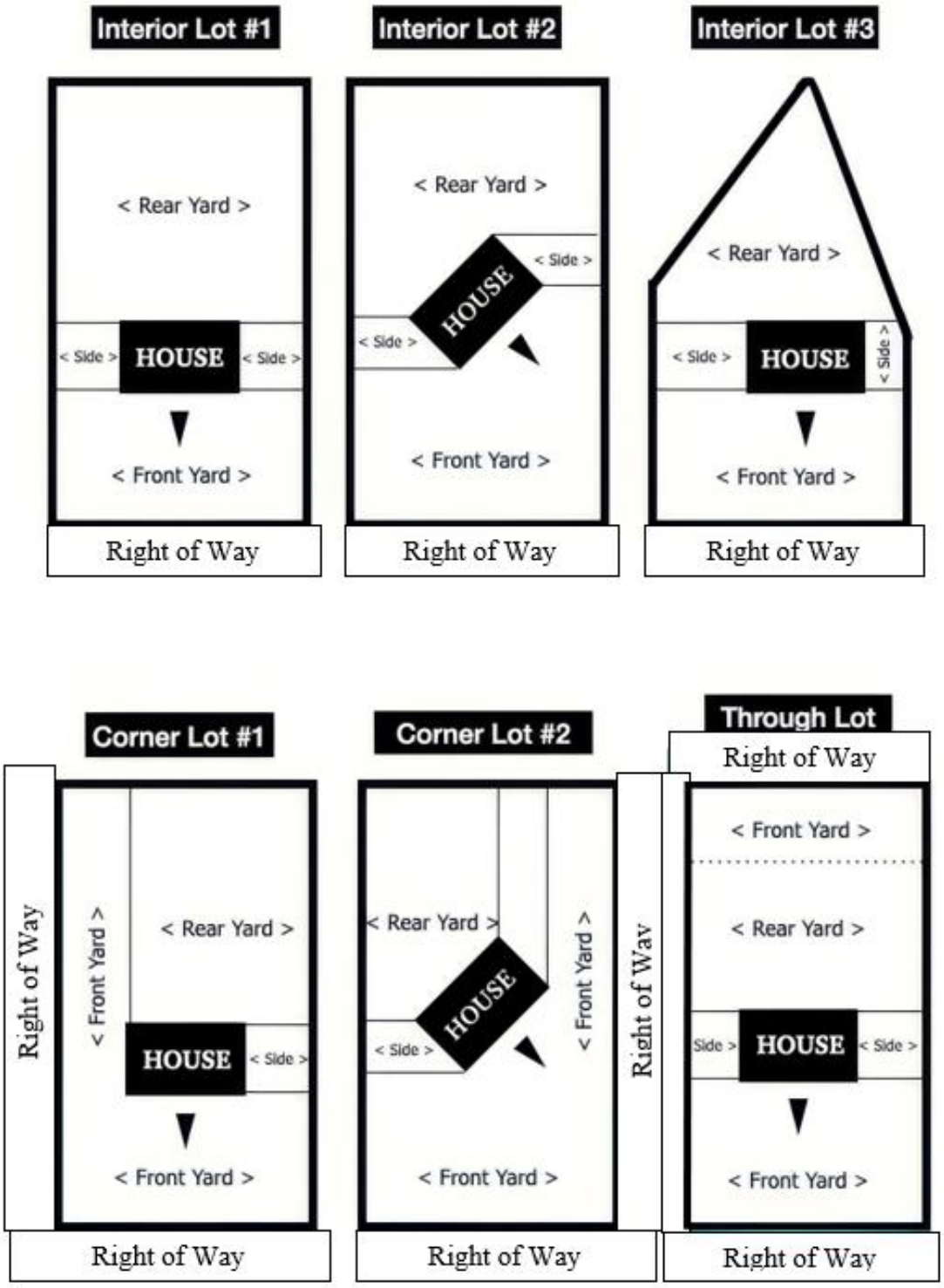

1 General Guidelines

Properties are conveyed to individual buyers, subject to deed restrictions and architectural covenants designed to establish control of land use and ensure that residences are attractive in appearance and appropriate to their neighborhood. These restrictions and site analysis data form a basis for the beginning of site development concepts.

The buildable area of every lot must be delineated to determine the portion of the lot upon which the house may be constructed. This area is sometimes specified by the easements and setbacks as recorded on the subdivision plat or in the legal description of the lot. It should be noted that while specific guidelines by community are listed in Section 5, house setbacks must ensure 20 feet between homes, (except where grandfathered), where one or both homes are a two story or more structure. **This is to satisfy the City of Aiken's Building Code requirements.**

Additionally, based on City guidelines dated 3-05, structures such as utilities and walls may extend into the minimum setback between homes.

This section of the guidelines applies across the whole of the Woodside Plantation, to include both new construction and existing home improvements.

1.1 Architectural Design: The architectural design concept for Woodside Plantation is that home structures should be generally unobtrusive in form and color in order to complement their natural setting. No particular period styles, foreign or geographic influences, or historical approaches are specifically endorsed or encouraged with the exception of Charles Towne Place. The Covenants provide the ARBs, in their sole discretion, the ability to deny specific applications.

1.1.1 Building Design Criteria: While each building designed for Woodside Plantation should express its own unique quality, it should become a part of a common vocabulary of materials and forms that work together to compliment and reflect the natural environment surrounding it. No one building should stand alone as a monument to its designer or as a replica of period architecture foreign to the natural setting. Consequently, certain criteria have been established to assist the designer in creating a design respectful of its site and adjacent structure as well as responsive to the needs of the client.

1.1.2 Composition: The composition of a building will be largely dictated by the functional relationships of program elements. The goal of Woodside Plantation is to develop in concert with the surroundings, not in competition with them. To preserve continuity within the neighborhood, the height of the structure should not dominate the height with the adjacent structures. Architectural form should also be compatible with neighboring structures, while care should be taken not to exactly duplicate existing structures, but to create a unique form that provides interest and variety within a common framework. The composition should be perceived in its totality, providing interest and aesthetic appeal from all sides of the structure. This

will enhance the quality of design in the development and enrich the visual experience of neighboring residents. Homesites adjoining the golf course or lake and those with a side or rear yard adjoining a street, should utilize the same or similar façade treatment on the sides and rear as they used on the front. This treatment includes but is not limited to windows, shutters, frieze boards and quoins.

1.1.3 Building Form: The eventual building form of every residence should be a carefully planned addition to the natural setting and embrace its site. Building shapes should provide interest and be compatible with neighbors. Large homes can be made to appear smaller and small homes to appear larger by the manipulation of shapes and forms, and by the effective use of decks, carports, garages, and screened porches. The roof profile of each home should complement the design of the home, the natural surroundings and neighboring designs.

1.1.4 Building Size: Section 5 of these guidelines stipulates the minimum and/or maximum square footage that may be contained in a residence built on a lot. Building heights shall be controlled by the ARBs and based upon lot location, tree cover, neighboring homes, and other factors affecting the site. Homes shall generally be one or two stories in height with taller designs to receive approval from the appropriate ARB prior to plan review. The maximum height of single family detached residences shall be limited to three (3) stories; except patio and garden home residences which shall be limited to two (2) stories. Should the majority of the dwelling units be constructed of near equal height, the ARB reserves the right to require that certain homesites be developed for alternate height buildings to insure against monotony in building heights. In addition, while maximum building sizes may be specifically established in a deed or recorded Covenants, the ARBs may in their sole discretion, refuse to approve a submittal that is inappropriate for the site due to size. The ARBs will not approve any submittal which crowds the site and/or is out of context with other structures in the area.

1.1.5 Lot Coverage: Lot coverage refers to the total square footage of all improvements covering the ground surface, (e.g. house, driveway, patio, deck, sidewalk, etc.) described as a percentage of the total area of the lot.

1.1.6 Garages/Parking/Driveways: All residences, except certain patio, cottage or multi- family attached homes, are required to have covered parking for two vehicles which shall be accommodated with garages. Electric garage door openers are required for all garages, and garage doors must be kept closed at all times, except during periods when work is being performed in the garage. Garages may be attached or detached, but should complement the architectural style of the residence, both in form and use of materials. In addition to the covered spaces, two additional off-street guest parking spaces should be provided. Driveways may be used to meet off street guest parking requirements. Garages cannot be used as alternative dwellings.

Driveway width shall be a minimum of 12 feet on curves and 10 feet for straight

drives. Walkways to the front entrance shall be 4 feet in width. The driveway may be placed within 3 feet of the property line, and reduced to 1 foot for the turning area into the garage when necessary to achieve proper turning radius. This situation supersedes any setback minimums. The driveway pitch must not direct water runoff to adjoining property. Driveway paving shall be concrete unless the ARBs provide or approve alternate materials on an exception basis or alternate materials are specifically stated in the guidelines specific to a particular neighborhood, such as The Enclave or The Highlands.

Gravel driveways and parking areas are not allowed. If at any time a privately-owned driveway is disturbed or damaged as a result of repairs, alterations, improvements or any other work performed on common or easement property, such as sidewalks and roadways, the property owner shall be responsible for repairs or replacement of such disturbed or damaged driveway in the absence of a written obligation from the party performing work on common or easement property. The WPPOA will bear no financial responsibilities to the property owner or any obligation to represent the property owner if a dispute arises between the property owner and the contracting company.

The owner of each lot involved in a "joint driveway" is granted a non-exclusive easement for ingress and egress over the joint driveway. (See WPPOA Covenants, 1st amendment to the 55th amendment for further information.)

Driveway colors are not encouraged. Deviations from standard light gray concrete color must be approved by the appropriate ARB. Light earth tone colors may be permissible on an exception basis

1.1.7 Service Areas: Service areas for heat pumps, air conditioning compressors, generators, trash cans, etc. should be screened and located as remote from adjacent properties as possible. Trash cans in service areas shall be enclosed with solid materials or a brick screen. Landscaping is not allowed as screening for trash cans. In addition, pool equipment, and landscape irrigation controls should be adequately screened or contained within service yards. All site plans must be submitted with the location of the equipment shown and the pad materials to be used. A landscape plan must subsequently be submitted to completely screen the equipment. See section Screening 1.7.4.

1.2 Building Materials: Materials such as wood, hardiplank, stucco, brick and stone are recommended for their blending quality with the surrounding environment. Premium quality vinyl siding will be permitted at the discretion of the ARBs, and where the Development Company has not prohibited its use, provided the aesthetic appearance of the home is acceptable. If vinyl siding is to be utilized, blending with other approved construction materials is encouraged. Vinyl siding and vinyl shake siding is only permitted for gables, dormers, fascia and soffits and as accents. While other manufactured facsimiles of natural materials are generally not allowed, certain manufactured composition products may be permitted at the sole discretion of the ARBs.

1.2.1 **Exterior Walls:** Natural woods, hardiplank, stucco and brick are encouraged. The use of plywood siding is not permitted as a finished siding. All vinyl siding exteriors are permitted only with express ARB approval.

Premium quality vinyl siding and trim will be permitted in some areas and/or for special purposes. All genres of vinyl siding require approval. Vinyl siding submissions should include the design style of the siding as well as the color. Vinyl shake siding is only permitted in gables, dormers and as accents. BLG dated 4-26-05 include verbiage that prohibits vinyl siding except for gables and dormers in Forest Bluffs, Oakman Bluffs, The Overlook, Belmont Bluffs, Cedar Ridge and Pleasant Colony. The Development Company has modified its position effective 5-16-05 to state that while vinyl siding is generally not acceptable, “shake like” siding in vinyl, cedar and hardiplank is acceptable.

1.2.2 **Roofing:** Roofing materials should complement the overall color scheme of the house. All types of shingles, slate or other types of roofing material must be approved by the appropriate ARB. A rounded or barrel tile, sometimes known as knee tile, is not permitted. Exterior roofing colors should blend with the environment and be approved by the appropriate ARB for all roof types. Roof penetrations such as vents, exhaust hoods, and roof flashing must be painted to blend with the roof. Continuous soffit vents or suitable gable and soffit vents are required and a minimum of 1’ x 6’ frieze boards are also required if appropriate for architectural style. Other roofing materials shall be held to a similar standard of quality. Roof vents and accessories should be located away from the front elevation and painted to match the roof color. Sloping roof pitches are required to be a minimum of 6/12 for functional and aesthetic reasons. The minimum 6/12 roof pitch applies only to predominant roof lines.

- **Metal Roofing:** Acceptable metal roofing styles are
  a) Standing Seam Metal Roofing (a type of roofing system with vertical metal panels running from the roof's ridge to the eaves. The panels are joined at their edges by interlocking seams that stand vertically, creating a seamless design and are typically made from materials such as steel, aluminum, or galvalume. For the most part, fasteners are concealed in a standing seam roof system.
  b) Metal Roofing (5V crimp metal roofing is a type of metal roofing system that is named for its distinctive V-shaped panels. These panels are typically made of steel or aluminum. Fasteners are generally exposed in a 5V roof system).
  c) Shed style metal roofing is also acceptable in some cases over porches and gables.
- **Shingle Roofing:** Acceptable asphalt shingle roofing is dimensional architectural grade**.** Other acceptable types are metal, cedar, slate and solar. **Note: Some neighborhoods have specific color and style requirements.**

1.2.3 **Windows:** Wood, vinyl or aluminum clad wood, or quality vinyl windows are permitted. The choice of decorative window grids planned for all exterior windows must be shown for all elevations when the home plan is submitted for approval.

- Dormer windows that open into unfinished spaces and that show exposed roof rafters or insulation shall be covered on the inside by a dark screen, blinds or interior shutters.

- Window Treatments on homes located on the golf course, lake or adjacent to Woodside Plantation Drive should have the same or similar type of exterior window treatment on the side facing those areas as they do on the front.

1.2.4 Open Areas (decks, porches, carports etc.): Open areas under porches & decks 4 feet and under and all sides of carports, etc. must be enclosed or screened. Enclosing or screening with quality wood lattice, horizontal or vertical boarding or other approved material that is compatible with the house is recommended. It is recommended that mature evergreen plantings be added. The appropriate ARB, in its sole discretion, may allow homes built on homesites with steep grades to have open space under the rear decking but may require softening.
No storage is permitted under these unscreened areas.

1.2.5 Materials Colors: Colors for all materials to be used should be specified at the time of home plan approval. Any change must be referred to the appropriate ARB for approval.

1.3 Site Design: The following design criteria have been established to encourage sensitive design responsive to each site. These criteria should be used in combination with Landscaping and Drainage criteria to be of most value.

1.3.1 Base Information: A properly dimensioned site plan is required for site plan submittal. If an adequate site plan is not available, the WPPOA reserves the right to require the property owner to obtain one at their expense. (See Section 2.1.3, 2.1.4, and 2.1.5 and Section 5 for complete requirements.) Proposed structures, screen walls, drives or noteworthy natural features should be indicated to guide the designer in properly locating and positioning his/her design elements to take best advantage of view corridors and to maintain privacy where required.

1.3.2 Composition: Care should be taken to compose the site elements in such a manner that the completed design blends into the fabric of the surrounding neighborhood. While minimum front, side, and rear yard setbacks are specified in subsequent sections of these guidelines and/or recorded plats, a varied streetscape is encouraged. Rear yards should be so composed as to maximize view corridors while simultaneously maintaining privacy screening from adjoining neighbors through creative use of natural vegetation, landscaping, or architectural screening. Driveway access on the site should be designated to respect the natural topography through the application of gentle curves and subtle positioning within the vegetation to minimize its impact on the site.

1.3.3 Materials: The use of natural materials is encouraged in the site design as they lessen the impact of the man-made environment. Supplemental landscaping should be

selected to enhance the existing vegetation, and should complement or accent existing vegetation by building on existing plant groupings with various textured plantings.

1.3.4 Storm Water Drainage & Water Run Off Control: Homeowners and their Builder are responsible for proper management of storm water drainage on their lot, whether discharging from the lot or entering onto the lot, both during and following construction of a home.

Storm drainage plans should adhere to all South Carolina Department of Environmental Services (DES) wetlands and storm management practices, in a manner consistent with Woodside Plantation's drainage plan.
Development and golf course staff are available to provide guidance and advice with respect to proper drainage practices and acceptable techniques to access the community and golf courses drainage structures and systems. However, the Developer, WPPOA and/or Golf Course are not responsible for proper storm water drainage on or from individual lots.

Homeowners and their Builder's Drainage plans should include the following:

- Proper grading of the site is essential to avoid excessive concentration of water runoff or collection, which may require significant remedial action after completion of home construction.
- Movement of water from the homesite should be directed into the community's storm drainage system.
- Homes should be placed at a height which will allow for water to flow away from the foundation and not onto another property, common area or golf course.
- On sloped areas, or primary storm water paths, grasses, or other substantially rooted planting should be used to slow the path of traveling water to prevent soil erosion. Mulched areas, especially those without significant plantings or check dams, are extremely susceptible to water run-off issues and will not be approved.
- Berms, swales, French drains, collection devices and other storm drainage management structures should be employed to manage the direction and flow of storm water to prevent erosion, in a reasonable manner that does not create undue burden on a neighboring property and which results in an aesthetically reasonable outcome.
- Rip rap, river rock, and other stone diffusion devices are acceptable features to control soil erosion.
- Plans should include the size and location of gutter or surface drain piping and the location and type of piping discharge control feature. (Pop up, rip rap, etc.) All pipe discharge locations must be inside property lines and pipes may not be discharged directly to the street. Drainage pipes may be installed directly to an adjacent storm drain inlet or storm water pipe.

Drainage shall be directed into the Community drainage system including swales, ditches, culverts or lakes. This shall be accomplished by means of grading, earth berms, swales, drain lines or by retention entirely within the site property lines. The expense and installation of culvert pipes, where required, is the responsibility of the owner or contractor. Incorrect installation resulting in drainage problems will require removal and correction. The homeowner or contractor will be responsible for all corrective costs related to any damage to curbs, streets, golf courses and common areas. The failure to control drainage and erosion may result in fines levied. The cost of all required restoration work is the responsibility of the property owner.

Each home site shall be designed and constructed to ensure that no excessive rain or irrigation water that would cause soil erosion or other problems is discharged onto an adjoining property. If water runoff problems occur, the ARB's have the right to require gutters (if not already installed), French drains, swales/berms, or other improvements necessary. These improvements will be done at the homeowner's expense.

It is the responsibility of the contractor during construction and the homeowners after construction to prevent drainage and erosion onto adjacent property whether private or common. Additional detailed information on soil erosion control and the impact of DES is found in Section 2.9.2.

1.3.5 Street Gutter Obstructions & Curb Cutting: Gutter and curb ramps are prohibited. Modified curbs must conform to the standard design and be approved on a case-by-case basis by the appropriate ARB. The gutter is a part of the street and belongs to either the Development Company or WPPOA. No modification or alteration may be made to the curb or street without permission of the appropriate ARB. No painting or stamping of or drainage through the gutter is allowed.

Any filling of the gutter with concrete, asphalt or other permanent material is not permitted. It is important that the water flows along the gutter line into the storm catch basins.

Stamped concrete driveway entrances, paver blocks, or other post construction modifications to driveway entrances require the appropriate ARB approval. These designer style features must end at the back side of the curb line.

To accommodate owners who want to provide a smoother transition from the street to the driveway, the ARBs require a special curb cut improvement application be made to the

POA-ARB. An approved construction detail of the procedure for curb cutting while keeping the integrity of the gutter line is available to remedy that particular situation. (See Appendix A-1 for detailed curb cut specifications)

Specifications and requirements regarding gutter fill-in and curb cutting design have varied over time. In the event these prior designs require repair or revision; the most current specification must be installed.

Curb cutting requires a deposit to the appropriate ARB and is refunded only after inspection of the work to ensure the improvement has been done correctly.

1.3.6 Walkway & Driveway Concrete Coloring: Deviations from a light gray concrete color must be approved by the appropriate ARB. Concrete stains are acceptable but must be a natural, earth tone color and driveway coloring must end at the backside of the curb line.

1.3.7 Site Design Colors: Colors of all materials used throughout the site must be specified and approved by the appropriate ARB. Colors should be compatible with the surrounding property and homesites.

1.3.8 Road Right-of-Way & Easements: The property owner is responsible for the maintenance of the road right-of-way from all their property lines to the adjoining curb lines. In some cases, the rear and side yards of the property are adjacent to a curb line and therefore must be maintained in the same manner as a front property line.

In general, each roadway in Woodside Plantation is defined by a road right-of-way (ROW). The actual travelled roadway is not as wide as the ROW. Since property lines start at the edge of the adjacent ROW, there generally is some ROW area between the curb line and the property line. Owners are responsible for maintaining the adjacent ROW adjoining their property. When looking at Record Plats, typically the ROW is shown, not the actual road, curb-to-curb. For example, if the ROW is 50 feet wide and contains an actual roadway that is 26 feet wide curb-to-curb, there is 24 feet of unused ROW. Since roadways are generally located in the center of the ROW, there would be 12 feet of adjacent ROW from a curb back to the property line. In addition to the adjacent ROW, there may be a utility easement on the road frontage of each lot. On some roadways
(Woodside Plantation Drive and East Gate Drive to name two) there is a WPPOA buffer area between the ROW and the property line. In those cases, where there is a buffer between the ROW and the property line, the owner is not responsible for maintaining the ROW or buffer. Therefore, a property line could be anywhere from 10 feet to 60 feet from a curb line.

1.3.9 Retaining, Sitting, Decorative & Privacy Walls: No Retaining Wall, Sitting Wall, Decorative Wall, or Privacy Wall shall be erected, placed, added to, or altered until the construction plans have been approved by the appropriate ARB. The

applicant must indicate in the submittal the location and style of wall, height, and materials to be used. It is required to use Appendix A-5, Improvement Checklist, to ensure an accurate submission and avoid unnecessary delay of review. All walls, other than retaining walls, must be within setback unless a variance request has been approved.

- **Retaining Walls:** These are structural walls that hold back earth and are only visible from one side. Retaining walls are required when the property needs to be re-graded to flatten out severe slopes or control water run-off.
    - Retaining walls may be located anywhere on the property to achieve the desired grading.
    - Retaining walls shall not have a maximum total height: however, every five (5) feet in vertical height must have a horizontal flat area of four (4) feet to achieve a tiered construction without the look of a massive high vertical wall.

- **Sitting Walls:** These are designed as freestanding walls and are visible from all sides. Sitting walls are normally used around fire pits, patios and landscape treatments and are normally 18" – 24" high. They must conform to setback requirements and other pertinent guideline restrictions.

- **Decorative Walls:** These are freestanding walls that can be used as entry treatments or landscape elements. They must conform to setback requirements and other pertinent guideline restrictions.
    - Decorative walls may not extend nearer to any property line than the front, side and rear building setback requirements
    - Decorative walls shall be 3' maximum in height
    - A Decorative wall will only have one span/section

- **Privacy Walls:** Privacy walls for patio homes that extend forward from the front line of the main structure will be of sufficient height to provide privacy to the adjacent residence. Walls extending from the home must be perpendicular to the privacy wall (patio homes) and must have a gate access in the 3 foot easement area.

1.3.10 Lake Water for Private Irrigation: Homeowners use of lake water for lawn and landscape use is strictly prohibited on Spalding, Oakman and Cunning Lakes. Excluding the list above, property owners are required to notify the current Lakes & Dams Director of their intent to use a lake for irrigation. Owners irrigating from approved sources will be notified when irrigation should be turned off due to lake treatments.

1.3.11 Golf Course Softening: Any site that abuts a golf course will require a softening of the home from the view of the golfer. Trees are the primary method. Groupings of 3 shrubs may also be used to soften in areas where trees may be more obtrusive. These softening elements should blend with the planned landscaping and with the installed landscaping installed on surrounding properties.

1.3.12 Street Trees: Street trees located within the right-of-way of most streets were planted by the Woodside Development Company and are intended to remain a vital part of the overall master plan for the Woodside Plantation community. Therefore, if a street tree is damaged or diseased and must be removed, it shall be replaced one-for-one by the property owner. A tree removal permit must be applied for from the POA-ARB. At

that time a replacement tree shall be specified by the property owner and an adequate time for replanting shall be determined. The following list of acceptable street trees (Common Names) shall be used to select the appropriate street tree replacement:

- Bald Cypress
- Elm(various)
- Holly-American, Nellie Stevens or similar
- Honeylocust ('Skyline')
- Linden (American)
- Magnolia
- Maples (various)
- Oaks (Various)
- Plane tree (London)
- Redbud (Eastern)
- Zelkovav, Japanese

1.3.13 Existing Homesites Tree Protection & Removal: No tree, with a trunk diameter of four (4) inches or greater, measured at a height of four feet above grade, shall be removed or effectively removed through damage for any reason not approved by the POA - ARB. A tree removal application is available from the WPPOA office.

The ARB reserves the right to have existing specimen trees preserved and may require that the site planning provide for their retention or replacement.
For approval to be given to remove a tree, typically at least one of the following conditions must exist:

- Trees which prevent access to a parcel of land
- Trees which pose a safety hazard to pedestrians, vehicles, buildings or other structures
- Trees which threaten to cause damage or disruption to public utilities
- Trees which are diseased, injured, or sufficiently weakened so as to threaten or cause damage to persons or property
- Trees which require removal for reasons other than set forth herein where it is determined to be in the public interest
- Trees that severely affect the drainage or topography of a residence

The POA-ARB reserves the right to require replacement of any tree to be removed. The following conditions, not limited to, but will likely require a replacement tree be planted:

- Trees determined to be of great aesthetic value or that may greatly affect surrounding aesthetics
- If more than 2 trees are being removed of significant caliper, such as 24" and over, as determined by the ARB
- Trees that create required softening from the golf course

Replacement trees may not be required to be planted in the same location of the tree to be removed. The goal of the ARB is to effectively maintain the presence of trees while working with property owners to achieve property goals.

1.3.14 Lot Clearing & Grubbing of Undeveloped Lots: Owners of undeveloped lots may submit an application to the appropriate ARB to clear or grub the lot. The appropriate form must be filled out and the request will be reviewed for approval. Lot clearing/grubbing may require remediation of the property. The lot must be cleaned up, avoiding any unsightly conditions and fire hazards.

1.3.15 Wetlands & Waters of the State: Woodside Plantation has a number of lots which are designated and recorded as wetland buffers on their recorded plats for Woodside Plantation. For these lots, there is compensatory mitigation under the U.S. Army Corps of Engineers (COE) in recognition of the continuing benefit to the permitted property, and for the protection of waters of the United States and scenic, resource, environmental, and general property values. As a result, Woodside Planation has agreed to place certain restrictive covenants on that Property, in order that it shall remain substantially in its natural condition forever.

- ***Prohibitions.*** Property Owner is and shall be prohibited from the following: filling, draining, flooding, dredging, impounding, clearing, burning, cutting or destroying vegetation, cultivating, excavating, erecting, constructing, releasing wastes, or otherwise doing any work on the Property; introducing exotic species into the Property (except biological controls preapproved in writing by the COE); and from changing the grade or elevation, impairing the flow or circulation of waters, reducing the reach of waters, and any other discharge or activity requiring a permit under clean water or water pollution control laws and regulations, as amended.

The following are expressly excepted from this paragraph:

a. removal or trimming of vegetation hazardous to person or property, or of timber downed or damaged due to natural disaster
b. restoration or mitigation required under law
c. construction of ditches, swales, and outfalls as pre-approved in writing by the U.S. Corps of Engineers (COE) and the South Carolina Department of Environmental Services (DES) that are both required and the minimum necessary for compliance with applicable storm water management and sediment reduction laws and regulations. These ditches shall not be constructed so as to drain wetlands through alteration of the hydrology.

Activities allowed under this exception shall be limited as follows:

a. All such activities shall be applicable to upland buffer areas only and not wetlands.
b. All such activities shall be the minimum size and number necessary.
c. Ditches and swales shall have a bottom width of not more than five feet, a depth below adjacent natural ground elevation of not more than four feet, and a side slope of not less than three feet horizontal to one foot vertical.
d. The side slopes and surrounding areas of ditches and swales shall be stabilized

and restored immediately following construction with natural vegetation. The bottoms of ditches and swales may be cleared and periodically maintained by removal of vegetation. Vegetation shall not be removed by use of herbicides or other chemical means.

e. Upon completion of the work, disturbed areas other than ditches and swales shall be restored to the original contours and elevations and shall be permanently stabilized by restoration of natural vegetation.

f. installation and maintenance of necessary utilities in designated upland buffer areas as pre-approved in writing by the COE and SC DES. All excavated areas shall be restored to pre-existing grade immediately following construction. Utility construction in wetland mitigation areas may be allowed if properly permitted by appropriate state and federal authorities.

g. construction and maintenance of pedestrian paths and/or boardwalks up to 4' in width as pre-approved in writing by the COE and SC DES.

1.4 Appurtenances: Appurtenances include such items as decks, courtyards, gazebos, pergolas, patios, and terraces and shall require an application to the appropriate ARB. The extended space should be detailed in a compatible manner with the main structure and should serve as a transition from the built environment to the natural. Materials and finishes of such appurtenances should be consistent with the architectural expression of the primary structure. Exterior decking, rails, garden walls, or fences should be compatible in detail with the main structure.

Rooftop elements such as solar panels or attached appurtenances such as security systems should be designed to coordinate with overall architectural expression and are subject to approval by the appropriate ARB. While detached garages or well screened carports are permitted appurtenant structures, walkways between such garages or carports and the house are encouraged to be covered.

Unattached guest houses are not permitted as Woodside Plantation's master plan does not allow for multiple dwellings on lots designated as single family homesites. "Attached" is defined as an enclosed hallway connection, designed for human passage, to the main house. Pool houses may not be designed for or used as dwellings. Free standing storage sheds, greenhouses, and other four walled roofed structures are not allowed, except for pool houses.

1.4.1 Statues & Ornamentals, Play Equipment & Other Structural Items:
Site appurtenances considered ornamental or recreational in nature such as fountains, gazebos, pergolas, garden sculptures or statuary, flag poles, basketball goals, trampolines, swing sets and etc. must be approved by the appropriate ARB. Displaying too many statues, etc. may be considered unsightly and should be avoided. The WPPOA requirement is that no more than five (5) statues be placed on an individual property.
Brightly colored canopies are not encouraged. These appurtenances should be restricted to areas of a homesite that do not obstruct sight lines of adjacent property to surrounding views or impact the golf course. In most cases, the appurtenances must

be within the rear building setback. These appurtenances may be required to be screened. Storable/portable solutions should be considered so that they can be stored out of site when not in use.

Detailed requests to the appropriate ARB are required for any permanent structure, object or equipment over 30 inches in height or length. Items that are secured in the ground, either by structure or plant material, require footings, electricity/water or cannot be easily moved are considered structural items and cannot be placed in the front, side or rear setbacks of a home and must have ARB approval. This includes fountains, bird baths, ornamental statues and other items that will be in any way made permanent in placement. Variances may be considered on a case-by-case basis with ARB approval.

In making judgments, the appropriate ARB will take into consideration any requirements to satisfy the City of Aiken, e.g. the 20' between homes rule for side setbacks, and will be especially sensitive to set backs that border a golf course or a lake. The ARB retains the right to require screening of any structural items. Any structure requiring footings or a pad for placement must list the material to be used such as cement or composite as the appropriate lot coverage must be accounted for.

a. **Statues and other ornamental** items less than 30 inches in height do not require ARB approval. In general, statues, ornamental items, or any structural item requires ARB approval. If statues, and other ornamental items will be viewed from the street, the golf course or neighbors they must be in good taste as perceived by the appropriate ARB. While a religious statue is acceptable, it must be screened from all adjacent property views.

b. **Fountains** must be located inside the building setback. Submissions for fountains must include a photo of the unit, the placement and the dimensions.

c. **Playsets and other play equipment** are allowed in Woodside Plantation. Play equipment that includes swings, jungle gyms, basketball goals, etc. must be located inside the building setbacks. Large playsets must be in the rear yard setback. Variances will not be granted for playsets in other than rear yard. Applications must include the location of the equipment, a photo and spec sheet of unit to be installed and a screening plan if applicable. Brightly colored canopies are not encouraged on swing sets. The preference for color in play equipment is natural or subdued to blend in with the natural surroundings. Bright colors are discouraged. Approvals for play equipment structures will be subject to periodic inspections to ensure they are being properly utilized, maintained and do not become unsightly. These structures shall be removed when no longer in use. These appurtenances should be restricted to areas of a homesite that do not obstruct sight lines of adjacent property to surrounding views or impact the golf course. These appurtenances may be required to be screened. Storable/portable solutions should be considered so that they can be stored out of site when not in use.

d. **Flagpoles. Flags, and Banners** require the appropriate ARB approval.

Flagpole Guidelines:

- Free-standing, in ground flagpoles require ARB approval
- Free standing poles may not exceed 21 feet in height
- A flagpole attached to a home or deck shall not exceed 6 feet, however does not require ARB approval
- Poles may not be mounted on a tree or mailbox

Flag Guidelines:

- One American flag may be displayed following US Flag Protocols
- The maximum flag size is 4 feet x 6 feet
- Sports, school, etc. flags are allowed
- Any flag flown must be maintained in good condition

Banner Guidelines:

- Banners may be displayed for a short period of time, e.g. Independence Day, Memorial Day.
- They must not exceed 2 feet in height and be confined to decking.

e. **Raised planters** shall have appropriate ARB approval. Prefabricated designs are encouraged. Materials, design and placement must be submitted for approval. Approvals for these structures will be subject to periodic inspections to ensure they are being properly utilized, maintained and do not become unsightly. The ARB will ask that these structures be removed when no longer in use.

f. **Gazebos:**

- Screening is restricted to see thru insect screening only (no solid panels)
- Cannot create a “closed room” look
- No windows or doors will be approved
- Footprint size in proportion to the lot/house size
- Softening through the addition of screening shrubbery or planting beds may be required based on location and visibility

g. Pergolas

- An open-sided structure
- Open/slatted roof
- Footprint size in proportion to the lot/house size
- Softening through the addition of screening shrubbery or planting beds may be required based on location and visibility

1.4.2 **Decks:** Decks must be incorporated into the architectural style of the home and landscaping. Open areas higher that 48 inches under decks must be screened. Decks must be located inside of Building Setbacks and must be calculated in lot coverage calculations. Deck color must be specified at the time of plan submission.

1.4.3 Swimming Pools: All pools must conform to the City of Aiken Building Code requirements including the necessity for fencing around the pool. Fencing around pools is encouraged to be wrought iron or simulated wrought iron. Split rail or horse fencing is not allowed. City code requires a minimum fence height of 4 feet. The ARB's may not approve pools on some lots, especially golf course lots, due to irregular shaped site or location relative to the golf course. Exterior above ground pools are not permitted. Minimum building setbacks listed in each specific area apply to pool surface and elevated aprons. Swimming pools shall be located in the rear yard. Only in rare instances (i.e. combined/very large lots), may variances be considered for pools in side yards. Maximum improvement site coverage limitations apply. The pool cannot be filled for use until the fence installation is complete.

All pool plans submitted shall show all property lines, setback requirements, pool, pool equipment, pool decking/aprons, retaining walls, fence type and location and a complete landscape plan all in one submission. It is required to use Appendix A-6, Pool Checklist, to ensure an accurate submission and avoid unnecessary delay of review. Several contractors may be involved in the pool design, the landscaping and the fence layout. A single accurate plan is required for submission to the ARB for approval.

As a minimum, separate plans showing all of this information must be submitted for a single review by the ARB. The site plan, which accurately shows the house location and lot survey pins, should be used as the starting point for this submission. This will give consistent locations for all the facilities. The intent of this requirement is to ensure that this is an integral design, allowing not only for the pool, pool equipment, fence and plantings, but also for berms, retaining walls and tree locations.

All pool equipment must be completely screened with evergreen plantings, from everyone's view, e.g. neighbors, street, golf course, etc. See section 1.7.4 for Screening.

1.4.4 Pool Houses: Pool houses require the appropriate ARB's approval. A Pool House may have a changing room, bathroom/shower, storage, seating/lounge area, and kitchenette. A Pool House cannot have a full kitchen or fully enclosed bedrooms. Unattached guest houses are not permitted as Woodside Plantation's master plan does not allow for multiple dwellings on lots designated as single family homesites; therefore, pool houses may not be designed for or used as dwellings. Pool houses are required to be placed within the appropriate building setback. Pool houses are required to maintain a maximum of 250 interior square footage and plans should not represent those of a secondary dwelling (multiple rooms, full kitchens, attic space, etc.). Softening through the addition of screening shrubbery or planting beds may be required based on location and visibility

1.4.5 Hot Tubs: All stand-alone hot tubs/Jacuzzies shall be located in the rear yard of the property within the building setbacks. Only in rare instances such as combined/very large lots or steep sloping lots), may variances be considered for hot tubs in side yards. Hot tubs greater that nine feet by nine feet in dimension will be classified as a "swim spa" (see Swim Spas 1.4.6). The hot tub and

persons in them must be completely screened from the view. Submissions for hot tub and Jacuzzi approvals must be submitted showing the plans for this screening. Use of potted plants may be considered if the hot tub is completely screened. Screening must be materials compatible with the exterior of the home or with 7gal or above evergreen plantings. Hot tubs cannot have a pool house.

1.4.6 **Swim Spas:** All swim spas or “hot tubs” larger than 9’ by 9’ in dimension shall conform to the City of Aiken requirements and meet the requirements set forth by the POA-ARB. The ARB’s may not approve swim spas on some lots, especially golf course lots, due to generally large size. No variance request will be considered for deterring from the guidelines set forth. Swim Spas must be located in the rear of the property within the building setbacks. Swim Spas cannot have a pool house.

Swim Spas must be completely encompassed by approved decking materials or vaulted (recessed in ground) to the upper rim of the spa on all sides not facing the dwelling, as approved by the POA-ARB. The decking requirements are that the deck is flush on a minimum of two sides not facing the dwelling, but not more than 3 sides. Decking will be required to tier down toward the dwelling until it meets an appropriate landing (deck or porch flush with house or grade). Railing will be required to be installed on all sides of deck not at grade level. Swim Spas will be considered to be encompassed by retaining walls on a case-by-case basis and reviewed by the appropriate ARB. Screening of the swim spa will require minimum 7-gallon evergreen plantings that will grow taller than the deck on the flush sides within one year and adequately obscure the decking. Planting beds or other appropriate plant material as determined by the appropriate ARB will be required for screening on all other sides.

Vaulted or recessed swim spas will be reviewed by the appropriate ARB on a case-by-case basis and must adhere to similar landscape requirements listed in the afore mentioned landscape requirements for swim spas encompassed by decking. All materials used for decking and/or vaulted submission must be reviewed for approval.

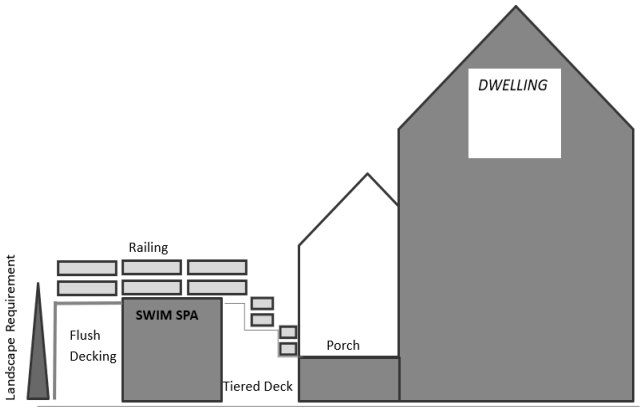

Alternate Side View

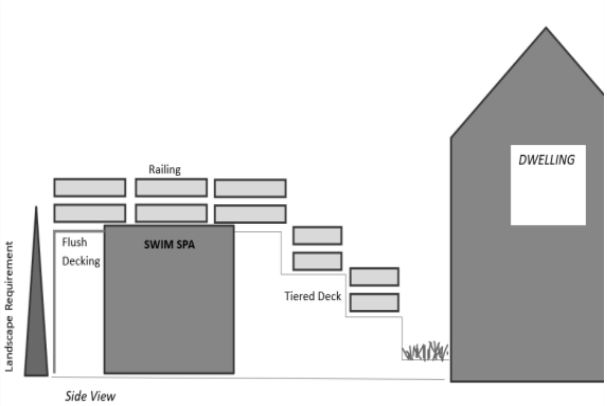

Side View

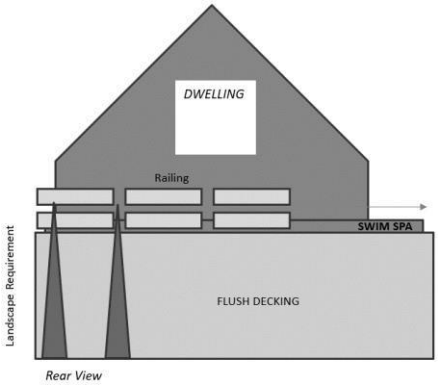

1.4.7 Out Buildings: The Woodside Plantation Covenants, prohibit permanent outbuildings of any type (except pool houses) within Woodside Plantation. This prohibition shall also include any non-permanent outbuildings such as trailers, tents, barns, garden sheds, tool sheds and greenhouses. Temporary non-permanent outbuildings may be considered by the POA-ARB for such uses as temporary storage (PODS) and children's playhouses. An application must be made to the POA-ARB for such temporary outbuilding use and shall have definite timelines for removal.

1.4.8 Outdoor Firepits and Fire Places: Free-standing, permanent outdoor fireplaces and fire pits shall require approval by the appropriate ARB. A detailed plan request will include:

- Dimensions and measured location of the burning unit, apron, and optional seating/knee walls inside the building lot setbacks
- Position of the unit in relationship to the residence
- Location of adjacent trees and shrubbery within 20 feet of the unit
- Location of all planned decorative lighting units
- Description and color samples of the construction materials
- Free-standing wood burning outdoor fireplaces and fire pits capable of burning seasoned wood shall have spark arrestors or mesh pit covers included in the design

1.4.9 Fences:

The Declaration of Covenants and Restrictions of Woodside Plantation, directs the preservation of the natural beauty of Woodside Plantation and its setting, the maintenance of a pleasant and desirable environment, and the establishment and preservation of a harmonious design to protect and promote the value of property. With this focus the following guidelines have been developed by collecting the various references to fences and retaining walls in the Building and Landscape Guidelines and by adding those additional guidelines necessary to provide a consistent model for reviewing fence and retaining wall plans. Courtyard walls are not addressed here. They are generally, a part of the original home approval but may be considered, post construction, by the appropriate ARB.

In general, fences are discouraged. When approved, the location and configuration of fences must be visually harmonious with the terrain and vegetation of the residential lots, and dwelling units and structures, and not unnecessarily block scenic views from existing structures or tend to dominate any general development or natural landscape.

- No fence shall be erected, placed, added to, or altered until the proposed building plans, specifications, plot plan, landscape plan, construction schedule or other items required by the appropriate ARB have been submitted to and approved in writing by the ARB. The applicant must indicate in the submittal the location and style of fence, gate style and location, color, height and materials to be used. It is required to use Appendix A-7, Fence Checklist, to ensure an accurate submission and avoid unnecessary delay of review
- Fence designs, are required to be *viewed through*, and are required to maintain a minimum of 50 percent openness
- If 50% or more of an existing lot fencing is being replaced, it constitutes a "new" fence and must be reinstalled at 50% open
- In addition to natural materials or materials harmonious with surroundings, fences with brick or stucco fence posts, man-made materials such as Trex or PVC, picket fences, split rail and 3, 4, 5 rail horse fences are allowed
- Wrought iron, including simulated wrought iron is preferred around swimming pools
- Standard colors for fencing are black or brown/bronze. All other colors need to be approved by the appropriate ARB
- *Chain link fences are not permitted*
- Both faces of all fences, except horse fences, should be identical
- It is preferred that privacy barriers be accomplished through the use of landscape screening. The 50% openness rule shall apply if a fence used as a barrier is approved
- Tying in to an existing fence requires written agreement from those property owners affected. WPPOA owned fencing will not allow tie in due to maintenance purposes
- Fences are prohibited from the front façade of the building to the street right of way line. Exception, see 1.4.9. e.

Woodside Plantation recognizes the use of commercially available invisible fence designed as an appropriate way for property owners to confine and control their pets on their property. The installation of invisible fences does not require approval of the POA- ARB, however the installation of invisible fences must adhere to minimum fence setbacks in the rear and side yard and is required to maintain 15 feet from the property line in the front at the time of installation to ensure that it does not encroach the utility easement.

Any damages that occur to invisible fencing placed within 15 feet of the front property line will be the full liability of the property owner. While not required, it is helpful to notify the ARB of the installation of an invisible fence for lot records. Additionally, invisible fences cannot be placed within 20 feet of a golf course. While the ARB understand that it is often required for the fence to be installed in the front yard to appropriately function, it is STRONGLY recommended that your pets are confined to the rear yard. Flags installed as part of the training period must be removed after 30 days.

The setbacks of fences from property lines and the height of fences must adhere to the following guidelines:

a. Fences shall be a maximum height of five (5) feet.
b. Properties *on the periphery of the Plantation* which back up to noisy, unsightly or otherwise undesirable areas may be granted a variance to the rule by the appropriate ARB. In those cases, a solid fencing or privacy fencing with a maximum height of six (6) feet may be considered.
c. City Building codes require a 4-foot minimum height security fence around all swimming pools. When a pool exists within the recorded building setback, the fence may be installed at the perimeter of the pool apron.
d. No wall, fence or similar structure may be constructed on the side property which is nearer the street boundary line than the front line of the main residential building as extended to the side property line (the "front line") except where otherwise approved by the ARBs. Walls may not extend nearer the rear property line than the setback listed for fences and/or walls constructed along rear property lines.
e. When a fence is requested that extends beyond the front line of the residence toward the street boundary it must be approved by the ARB, they shall be a four (4) feet maximum in height. This would only occur when the property has two front yards, such as on a corner lot.
f. Fences are not permitted in The Fairways. See Section 1.8.
g. Minimum fence setbacks shall be as follows:
- When the rear of property borders lakes or golf courses, that rear setback shall be a minimum of 20 feet.
- When the side of property borders lakes or golf courses, that side setback shall be a minimum of 10 feet.
- Except as noted above the minimum setback for a fence shall be 1 foot.

1.4.10 Putting Greens: Putting greens shall require the appropriate ARB's approval. Putting greens will be considered only if the appropriate lot coverage allows for such improvement. Putting greens shall be located in the rear yard. Putting greens may not dominate over the natural landscape elements and the ARB retains the right to deny unreasonably sized putting greens at their discretion. The ARB has the right to require screening of such area. Putting greens may be installed using synthetic turf materials. All areas surrounding the putting green should be natural elements such as sod or planting beds meeting appropriate guidelines. Putting greens may not be greater than 5 inches in elevation and cannot include mini golf or overly extravagant features.

Putting green flags may not exceed 24 inches in height.
Putting greens are required to be placed within the appropriate setback as defined below:
- Rear of property bordering lakes or golf courses shall be a minimum of 20 feet
- Except as noted above the minimum setback for a putting green shall be 5 feet
- No variances will be considered for putting greens setbacks and location

1.5 Other General Guidelines: Additional guidelines as they relate to the whole of Woodside Plantation.

1.5.1 House Numbers: Effective with home construction starting on 9/1/2005, all homes must have street numbers prominently displayed in an area that can be easily read from the street, preferably the mailbox. House numbers are also encouraged but do require ARB approval. This is a city requirement and important for emergency vehicles to find a specific address quickly. Contact the POA-ARB for details or specifications concerning location and size of house numbers. House numbers are not permitted to be painted on the street curb in any fashion.

1.5.2 Exterior Lighting: The design and location of all exterior lighting fixtures must be approved by the appropriate ARB. Exterior lighting may be utilized to illuminate driveways, walks, entries and landscape features. All exterior lighting should be included in the landscape plan. Neither these nor any other illumination devices, including but not limited to Christmas ornaments, located anywhere on the structure or grounds of any residential lot, or dwelling unit, or other residential structure within the property shall be located, directed, or be of such intensity as to adversely affect the nighttime environment of any adjacent property.

Brightly colored exterior lighting is prohibited. Lights should be neutral with soft illumination. Color changing LEDs are prohibited except for holiday periods. Holiday lighting may be installed within one month preceding the holiday and two weeks afterwards.

Lumen ranges for specific lighting are as follows and must be provided on submission:

- Step lights: recommended minimum 12-100 max lumens
- Hardscape lights (on walls): recommended minimum 50-185 max lumens
- Landscape lights: recommended minimum 50-300 max lumens
- Path lights: recommended minimum 100-200 max lumens
- Landscape spotlights: 120 max lumens
- Lamp posts: recommended minimum 120-180 max lumens
- Pond/pool lights: recommended minimum 200-400 max lumens
- Motion sensor lights: recommended minimum 300-500 max lumens
- Flood lights: recommended minimum 700-1000 max lumens

The ARBs reserve the right to require adjustments to any exterior lighting.

1.5.3 Solar Energy Systems: A Solar Energy System requires the appropriate ARB approval prior to construction. Homeowners should understand that the size and location of any solar system is a sensitive subject as it relates to keeping the look and feel of the natural surround that the Covenants and Building Guidelines seek to protect. Technology in this area has and is changing quickly and a broad variety of system components are available. The following are general guidelines that will be used in considering any system for approval by the appropriate ARB.

- Construction drawings for the proposed installation must be provided. They

should be drawn to show the location and number of solar panels, attachment to roof structure, and location of any other exterior system components

- Calculations should be provided showing the number and area of the solar panels required
- A sample or illustrated brochure of the proposed solar unit, which clearly depicts the unit and defines the material used, should be submitted with the application
- Solar panels, wherever possible, should be installed on the plane of the roof material (flush mounted)
- Solar panels must be firmly secured to the roof in accordance with local building codes
- Solar panels or other components not mounted on the roof (ground mounted) must be installed within the specific lot setbacks as indicated by the plat or set forth in the Building Guidelines. Ground mounted panels shall be screened from view from adjacent properties
- All exterior plumbing and electrical lines must be painted in a color scheme consistent with the structure and materials adjacent to the pipes. All of these components must be completely screened from view with materials compatible with the exterior of the home or with 7gal or above evergreen plantings
- Electrical conduit and junction boxes are to be installed as inconspicuously as possible, with preference to maximize internal conduit runs. All exterior plumbing and electrical lines must be painted in a color scheme consistent with the structure and materials adjacent to these lines and must be completely screened from view with materials compatible with the exterior of the home or with 7gal or above evergreen plantings.

Approvals will be made on a case-by-case basis. Approval may be granted for some locations and not others simply based on how dominant the system appears in the view of the neighbors and the golf course as judged by the appropriate ARB.

1.5.4 Mailboxes: The design of mailboxes and posts has been established by the WPPOA. Each property owner shall have a single freestanding mailbox post unless the property warrants a shared post. All regular mailboxes and posts shall be purchased from the WPPOA. They are to be uniform and conform to the WPPOA standard design throughout Woodside Plantation with the exceptions of Charles Towne Place and the Highlands. The Highlands mailboxes and posts shall be purchased from the Highlands POA. There shall be no attachments to the post/platform, such as newspaper boxes, however post tops (copper or illuminated copper) are permitted. Reflectors shall be limited to one per side of mailbox/post.

The owner is responsible for all repairs, replacement and cost associated with the mailbox and post. Mailboxes need to be straight and in good condition. The WPPOA reserves the right to request and require homeowners to repair, replace or repaint their mailboxes if warranted. Replacement post, mailbox, and lettering are available through the WPPOA office for a fee. Post stain is available at the WPPOA Office at no charge.

The mailbox and post shall not be located in front or within 3 feet of a fire hydrant. Plantings are allowed around the post; however, the lettering must be kept clearly visible for emergency vehicles to quickly locate a residence. Plantings must not encroach into the roadway. The WPPOA will require maintenance or removal if the plantings become unsightly or create any maintenance issues.

Mailboxes may be tastefully decorated for major holidays; however, the decor must be removed within two weeks after the holiday. Flagpoles may not be attached to mailboxes. Written permission must be received from the US Postal Service to relocate a mailbox.

1.5.5 Boat Storage: Lake front property owners may request approval from the POA-ARB to store one (1) boat on the shore of a lake within their property. The boat is required to be appropriately screened from neighboring properties as well as those properties across the lake. Boats may not be powered by an internal combustion engine.

1.5.6 Lightening Suppression Systems: Lightning protection systems shall require approval by the appropriate ARB. All systems and their installation must conform to NFPA780 standards. Down connectors (cables to the grounding electrodes) must be hidden or painted to match the home. Completely inconspicuous system installations are preferred. A detailed plan request will include the number and style of lightning air terminals (lightning rods) and details of the exterior cabling and equipment routing and locations.

1.5.7 Satellite Antennas: Homeowners may install Satellite Dishes in conformance with the Federal Communications Commission Over- the- Air Reception Devices (OTARD) Rule. This Rule does not apply to conventional “stick” antenna to receive distant over-the-air television signals or antenna for broadcast radio or amateur (ham) radio.

The POA-ARB requires that the homeowner complete a Satellite Dish Installation Form which may be obtained at the WPPOA office prior to installation. The requirements for satellite dish installations are as follows:

- Dish antenna is limited to one meter (39.37”) or less in diameter
- Dish antenna location must be on homeowner’s property. It may not be located on Common Property, Golf Course or any other property and all equipment must not extend beyond the homeowner’s property line.
- The dish installation should be in an inconspicuous location, allowing for acceptable signal quality and must be shielded from view from the street and neighboring properties.
- Ground installation is preferred over roof installation, however attaching the dish antenna to a roof is permissible.
- All dish antennas, including poles that are no longer used for service are to be removed from resident’s property within 30 days of service termination. Disposal of the dish and pole may be made by contacting the City of Aiken for a special pick- up or taken to Aiken County Recycling Drop-off Center.

1.5.8 **Inflatables:** Inflatables must be approved by the POA-ARB.

a. *Party or sports inflatables* may be used for a maximum of three days and will not require approval from the POA-ARB; however, residents must inform the WPPOA office of their use and installation. They must not interfere with the quiet enjoyment of the residential homes within the surrounding area.

b. *Holiday inflatables* require written permission of the ARB as defined by the Covenant Amendments, Part Two, Article 1, Section 9. Therefore, homeowners are required to complete the appropriate Inflatables Form.

- No Holiday Inflatable may be displayed without prior approval by the ARB.
- Holiday inflatables may be displayed not more than two weeks prior to the holiday and removed no later than one week after the holiday.
- Holiday Inflatables are restricted to less than ten feet in height.
- Holiday Inflatables may be lighted so long as they do not interfere with the quiet enjoyment of the residential homes within the surrounding area.

1.5.9 **Window Air Conditions & Window Fans:** Window air conditioner units and window fans are not permitted in Woodside Plantation. Interior air conditioning/heating units that require venting of exhaust to the outside of a dwelling may not be vented through windows. They may be approved by the ARB provided the venting is done through an external vent similar to the vent on a laundry dryer. The use of mini-splits is recommended to heat and cool smaller rooms.

1.5.10 **Yard Signs:** WPPOA does not allow any signs (advertisement, political candidate, vendor, etc.) except for real estate signs described in Section 1.5.13 and homebuilder construction signs covered in Section 2.10.2. Security monitoring signs may only be placed within five feet of the home's front and rear facade provided the signs do not exceed one square foot in size.

The WPPOA Association Manager has the authority to approve "limited time" signs such as might be used to direct traffic to an event, or a Women of Woodside activity. No other signs will be permitted without specific POA-ARB authorization. The ARB in its full discretion will determine other appropriate signage on a case-by-case basis.

1.5.11 **Real Estate Signage:** Real estate signs authorized as "For Sale" signs, whether by a real estate company or by the homeowner are permitted if they conform to the size, color, content, and placement. Colors are to be green lettering on a white background made of aluminum material. Verbiage may state "Available" only; no "For Rent" or "For Lease" signs are permitted. Size shall be a maximum of 20" horizontal x 12" vertical with 2" lettering on aluminum. No company logos are to be on signs. Realtor signs may have "Available" and/or the real estate company name and one (1) telephone number listed.
The WPPOA office may supply local sign vendor information if needed. One sign may be displayed on the front near the existing road frontage. No signs should appear on the golf course or on Woodside Plantation Drive unless it is the frontage of a home site.

1.5.12 Real Estate Information Platform: Platform style real estate signage for undeveloped re-sale lots may be utilized with the following guidelines. In many instances, the clearing/grubbing of a re-sale lot is needed to provide the prospective buyers an unobstructed view of the property's contour and size. Clearing/grubbing involves the removal of underbrush, small growth, and dead trees and, in some cases, diseased trees in order to clear access to and space for the display sign.

In order to ensure standard signage, the POA- ARB has coordinated guidelines for the construction and installation of the standard display sign.

- Any non-conforming signage will be removed by the WPPOA
- The specifications of platform style signs are outlined in Appendix A-2c
- Only one real estate sign of any design is allowed on a lot. Failure to comply will result in a fine of $100-300 and/or $25 per day until violation is satisfactorily remedied
- Signs should be located within the building envelope for a lot and no closer than 15 feet of the curb. Placement should be to allow access from street side of lot. No signage may be placed within 20 feet of the rear property line. Any variance must be approved by the POA-ARB

Platform signage information is limited to:

- A rendering of the lot highlighting the building envelope and the recommended/ suggested home footprint
- A rendering of the recommended/suggested home including floor plans
- Lot owner or realty company and representative contact information
- Maintenance is the responsibility of the lot owner/realty company displayed on the lot sign. The POA-ARB reserves the right to require maintenance work on, or removal of, a sign. Requested maintenance work is to be accomplished within 5 business days

1.5.13 Under Contract Signage: Real estate signage may display “Under Contract” signage as long as it is in conformance with Woodside requirements. Signs must be white aluminum with green lettering. No plastic signs are allowed. The dimensions are to be twenty (20) inches X six (6) inches. They must be placed underneath the realty signage and fastened with a center screw. Adhesive, plastic or magnetic signage is not permissible.

“Under Contract” signage must be removed from the property no later than the closing date for the property. These approved signs may not have moving parts, streamers, balloons, pennants, information holders or any other attachments nor can they be illuminated. “Sale pending” or “Sold” signage is not permissible.

See Appendix, A-2a, 2b & 2c, for detailed realty signage specifications.

1.6 Variances: The ARBs may occasionally grant certain variances when there is valid justification. A variance request must adhere to the following process:

- Application must be in writing to the appropriate ARB.
- A Variance sign will be posted for 10 days along the frontage of the property. Neighboring properties within 100 feet from all property corners will be informed in writing and by email, to be given the opportunity to provide input to the Board. Properties across the fairway or lake shall also be notified.

The ARBs will utilize a variance checklist that takes into consideration such factors as:

- Granting the variance may cause a potential impact on adjacent properties.
- Other alternatives that may be available to the applicant.
- If a hardship may be inflicted on the applicant by not granting the variance. This hardship must relate strictly to the physical or topographic features of the property and cannot relate to any personal or financial hardship.
- Approving the variance would substantially affect the usability of the property.
- Approving the variance would result in removal of valuable natural vegetation.
- The area of the reduced setback is adjacent to developed and undeveloped lots that may impact adjacent property owners.
- The ARBs will consider all input received and vote whether to grant approval. ARB Board quorum is needed to continue consideration. A simple majority approval is required.
- Variances on Golf Course properties shall require the appropriate Club's approval.
- Ground level patios and service yard enclosures do not require a variance for placement within setbacks.

1.6.1 Variances will not be granted for the following:

a. Section 3.6.7 – Height/Stories of buildings
b. Section 3.7.2 – Above ground pools
c. Section 1.4.3 - Swimming pools shall be located in the rear yard only. Only in rare instances (i.e. combined/very large lots), will variances be considered for pools in side yards
d. Section 3.7.5 – Flagpole height and flag size
e. Section 3.7.8 – Window air conditions and window fans
f. Section 3.9 – Fence 50% openness.

g. Section 1.4.9 - Chain link fences
h. Section 1.4.9 - Maximum height of fence 5 feet, unless periphery of Woodside Plantation.
i. Section 1.7.5 i – Synthetic turf material substituting as grass or a ground cover
j. Section 1.7.5 j - White crushed stone as a primary ground cover.
k. Section 9 - Lot Coverage exceeding the maximum percentage of the total area of the lot.
l. Section 3.7.4 Swim Spa requirements
m. Section 1.4.10 - Putting greens setbacks and location
n. Section 1.4.1 c- Play structures in other than rear yard.

1.7 Landscaping & Hardscapes: Woodside Plantation is best preserved by integrating homes into its natural beauty. To that end the Building and Landscape Guidelines seek to minimize the effect which the intrusions caused by development have on the natural order. The ARBs will focus on open views with natural and planted landscape.

Homeowners are encouraged to consider not only their view but that of their neighbors and golfers in the planning process.

While these are general requirements and apply to all of Woodside Plantation, including new construction and existing homesites, more specific or detailed requirements may be laid out for a specific area or phase of the Plantation. Those guidelines laid out in specific sections, when different from general guidelines, supersede the general guidelines. ***New construction landscaping submissions have additional and more specific guidelines that can be found in section 2.***

Every property owner (resident, absentee, non-resident, a Development Company or WPPOA) is responsible for preventing the development of unclean, unsightly, or unkempt conditions (overgrown grass, weeds, trash, and other debris) of buildings, yards and empty lots which shall impair the beauty of the neighborhood, as a whole or the specific area.

Owners are also responsible for maintaining the adjacent road rights-of-way and easements adjoining their property. All retained natural areas, landscaped areas, beds and lawn areas must be maintained and weed growth must be controlled.

1.7.1 General Requirements:

a. Landscape designs shall be appropriate and adequate for the size, shape, topography and location and shall complement the design of the dwelling as well as the context of the neighborhood.

b. All plantings shall be situated and maintained so as not to encroach on or damage adjoining properties. Any encroachment of plantings onto adjacent properties that cause issues such as staining to driveways/home/roof, or damage to driveways/roofs must be corrected by homeowners of the plantings.

c. Landscape plans must show the lot and curb lines, all existing and proposed improvements, including all hardscapes, as well as a planting plan. Landscape Plans must provide for sod, ground cover, undisturbed natural areas, created natural areas or hardscape of the entire lot. No bare earth is permitted.

d. Houses are to have an appropriate number and type of evergreen plants around the entire footprint. The general requirement is at least one (1) plant for every twenty-five (25) square feet in plant beds and one (1) plant for every five (5) linear foot along foundations. At the appropriate ARBs discretion additional plant spacing will be considered for plant varieties with a larger diameter at full growth. There is an exception in the case of Patio homes with a 3-foot side lot line. The type of plants is the owner's

discretion, so long as they are evergreen, with approval of the ARBs for appropriateness for the area.

e. If applicable, show on plans all swales, berms and any grading required to control and prevent erosion when available. Storm water shall be directed as best as possible to the front curb line or rear lot line to avoid adjacent residential properties.

f. If applicable, all drainage structures, inlets, leaders (downspouts) including existing drainage structures and piping with sizes will be required to be shown on a drainage plan at the ARBs request.

g. If applicable, all utilities, including electric transformers and meters, gas meters, telephone, cable, water heater and HVAC, etc., will be required to be shown on plans. Plantings should be installed so that there is a five (5) foot clearance around the entire utility box.

h. Utilities and meters, on or close to the structure must be accurately shown on the plans and must be screened on front, rear and sides. It is required that there is at least one (1) foot clearance on each side of the meter. Proper maintenance around the meter is a requirement.

i. Fence requests and issues related to fencing or walls are addressed by a specific and detailed request to the ARBs as are requests for pools, spas and other outside appurtenances or structural elements, however it is required that if hardscape such as a cement pad, is going to be used for an appurtenance (i.e. hot tub or firepit), that it must be identified in the landscape plan.

j. Use numbers to represent existing and proposed plant material in plans. Symbols or abbreviations can be used in conjunction with, but numbers must be present in the location of the plant variety to clearly identify plant material. All plant material should be shown at the proposed spacing (based on the size of the plant at its mature width). The diameter of the mature width of the proposed plant must be shown.

k. All pavement, concrete, concrete pavers, brick pavers, and concrete pads for Hot Tubs and Fire Pits, must be accurately shown on the submitted Plans. Samples of materials must be submitted for approval. If items for addition or deletion are identified during construction that alter coverage, a revised site plan must be submitted for approval.

l. All proposed landscape and exterior lighting must be shown on Plans, along with manufacturer data showing the fixture type, angle of light emission, and light intensity measured in foot-candles or lumens. (see section 1.5.2)

m. The use of exposed, non-hooded spotlights will not be approved. Light intensity will be controlled to be non-obtrusive to others as determined by the ARBs. Lighting fixtures are to be contained within the property lines.

n. All decorative walls, retaining walls, patios, arbors, water features, gazebos, and other structural items must be shown on Plans.

o. The use of brick, stones, gravel, pebbles, lava rocks, pavers and other inorganic materials shall not predominate over the use of organic plant materials.

p. No railroad ties may be used in landscaping.

q. The removal of trees on lots or parcels that have already been

developed is discouraged by the ARBs, unless the trees pose a danger or are diseased.

1.7.2 Drainage: When submitting for updates to drainage and erosion controls, plans should detail all soil erosion and storm water control measure put in place throughout the project; to include water flow, swales, berms, catch basins or drainage boxes, pop-ups, piping, gutters, where they are buried, rip-rap, French drains, leaders (downspouts), including existing drainage structures etc. that were implemented. All piping sizes should also be shown.

- Landscaping and Grading for proper drainage, whether stormwater or irrigation water, is required. It is necessary to ensure proper drainage flow from the lot under construction into Woodside Plantation's drainage system. Adjacent properties must not be adversely affected. If water run-off problems exist, the ARBs have the right to require remedial improvements at the homeowner's expense.
- Proper drainage plans showing the flow of storm water and detailed drainage systems proposed will be required at the time of landscape plan submittal (see 2.6.3).
- Discharge may be accommodated in drainage structures, if appropriate.
- If applicable drainage plans will require a legend to show pipe size variations and any symbols used to indicate specific drainage elements.
- All water outlets such as pop-ups, are required to remain a minimum 2 foot from golf course property lines.

1.7.3 Plants:

a. All trees shall be specified by caliper plus ball size or container size.

b. Plant material heights, spreads, caliper, ball and container sizes are comprised from the National Standards generally used in the industry for competitive bidding and standards of quality for the public's purchasing and use of such plant material.

c. All plants shall be live, healthy, vigorous, well rooted, and established in the container in which they are growing. Container grown nursery stock shall be warranted for a period of not less than one year from the date of installation.

d. Plastic or fake plants are prohibited.

e. Street (curb side) utilities must have a minimum of (3) spreading evergreen plants that shall be no more than 24" high at the time of planting. For transformers, plants shall not be placed at the opening (access point) of the equipment so as to block access. Sides and rear generally shall be screened.

   For proper line of sight and safety, shrubs and ground plantings within ten (10) feet of the curb less than 6 feet from driveways and intersections, shall be no higher than two (2) feet at maturity.

f. Tankless Water Heaters shall be screened from front, rear and sides with 7gal or

above evergreen plants that will grow at least to the top of the equipment within one year. The plants should be of a genus and species that will grow and screen the equipment in one season's growth. The contractor shall measure the height so as to correctly specify size of plants.

g. All electric and gas meters shall be screened completely with evergreen plants 7gal or above. Any openings shall be from perpendicular to the residence and viewed only by the neighbor. The shrubs shall be a spreading type and shall be spaced so that as they grow, there will be minimal exposure to the street and the rear yard (or golf course).

h. Satellite dishes shall have their supporting poles screened with spreading evergreens to minimize the impact of dish height at time of planting.

1.7.4 Screening & Softening: Screening is often required for decking, appurtenances, utility meters and cable boxes, decks, porches, etc. Softening is often required of areas that the ARB deems obtrusive or stark, such as expanses of brick, lattice and large exterior walls.

- Screening can be achieved through certain enclosures, using materials compatible with the exterior of the home and also through the use of plant material. A combination of the two is preferred. Anytime screening is required, plant materials are required to be evergreen. Minimum 3 gallon plants are required unless otherwise noted in specific guidelines (such as the use of 7 gallon plants at HVAC, generators and pool equipment).
- HVAC units, generators and pool equipment shall be screened. Lattice or materials compatible with the home may be used in lieu of plants. Plants may be smaller if lattice is in place. The preference is to have both. If plants are used for screening they must be evergreen, 7gal or above, and variety that they will adequately screen the units completely in one year. Lager gallon sizes need to be used for larger units to adequately screen in the appropriate time frame.
- Trash cans in service areas shall be enclosed with solid materials or a brick screen. Landscaping is not allowed as screening for trash cans
- Softening is achieved through plant materials placed in, near or within proximity of the area required to be obscured. Softening may be achieved through groups of plantings or trees. Softening sufficiency is determined by the appropriate ARB unless otherwise noted in specific guidelines.

1.7.5 Sod & Ground Cover:

a. Front and rear portions of the lot must be sodded with an approved grass that is consistent with that used in Woodside Plantation such as Zoysia, Bermuda, St. Augustine and Centipede.
b. Before sod installation, all large rocks, roots, gravel, and construction debris must be removed from the sod bed. It is strongly recommended to spread a 2-3 inch layer of organic compost across the prepared bed.
c. Sod and river rock is the preferred means of controlling erosion on sloping sites.

d. The installation and appropriate use of complete sprinkler systems are required for all landscaped lot areas where softscape elements are installed. The irrigation of Natural areas retained from the undeveloped lot is at the discretion of the property owner. Please note that according to the City of Aiken regulations, all irrigation systems connected to the public water system after June 13, 2000 must have a testable backflow device installed and must be tested biannually by a certified plumber.
e. Trees, ground cover plantings, pine straw, mulch, bark or other acceptable materials shall be placed on all areas not otherwise required to be covered by sod. Expansion of mulched areas requires the appropriate ARB approval.
f. Pine straw shall be organic and its natural color unadulterated in any way to change or enhance its color.
g. Mulch shall be an organic wood product commonly used as a ground cover. Acceptable colors of mulch are black or brown, whether natural or dyed. No other color is permitted without ARB approval.
h. Mulch or pine straw beds should also have appropriate shrubs and ground covering plantings (vines, flowers, shrubs, ornamental grasses. etc.) in the beds, with a general requirement that at least one plant should be provided for every 25 square feet of bed.
i. Synthetic turf and/or ground cover materials substituting as grass or a ground cover are not permitted except for approved putting greens.
j. All stone colors shall require ARB approval. The location and square footage that the stone will cover will be required as stone cannot predominate over the use of other organic materials in planting beds. White crushed stone cannot be used as a ground cover.
k. Sand beaches on any water front properties are not permitted.

1.7.6 Landscaping Beyond Property Lines: In certain areas, (adjoining the golf course, lakes, road right-of-way and common areas), it is the responsibility of the homeowner to maintain beyond their property line to ensure that proper landscape maintenance is achieved. The cost associated with this maintenance will be the responsibility of the homeowner, and homeowners will acknowledge that this additional maintenance does not convey ownership of the property.

1.8 Golf Fairway Residential Areas: These Building Guidelines and the Declaration of Covenants and Restrictions of Woodside Plantation (the “Covenants”) place special restrictions which affect “Golf Fairway Residential Areas”. “Golf Fairway Residential Areas” as defined in the Covenants are all those residential lots or tracts or blocks of land intended for residential development located adjacent to any golf course land located in Woodside Plantation. The purpose of this amendment is to clearly state the landscape requirements for “Golf Fairway Residential Areas.” Pursuant to the Covenants, that portion of any “Golf Fairway Residential Area” within twenty (20) feet of the lot or tract line bordering the golf course shall be landscaped in general conformity with the overall landscaping pattern for the golf course fairway area established by the golf course architect. Pursuant to these Building Guidelines, property facing a golf course must be

similarly landscaped as the front of the property, as viewed from the street.

Specific responsibilities with respect to landscaping areas of home sites which abut Golf Courses Course(s) include:

- Grassing and landscaping areas within twenty (20) feet of the golf course in general conformity with the overall landscaping pattern of the golf course
- Installing shrubbery and trees in the rear of home sites to soften the view of a home from the golf course
- Managing drainage from or onto the home site, both during and following construction of a home, in a manner to properly move drainage water in a reasonable manner, consistent with Woodside Plantation's Drainage Plan
- Avoiding unsightly conditions on the home site which may be visible from the golf course
- Working with the appropriate Golf Club staff to avoid any issue which may adversely affect the golf courses or their maintenance

1.9 Undeveloped Lots: Undeveloped Lots shall remain natural. If desired, the privately owned Undeveloped lot may be grubbed upon POA-ARB approval. Grubbed is defined as the removal of underbrush, vines, dead and falling trees. No tree shall be removed with a trunk diameter of four (4) inches or greater, measured at a height of four feet above grade. Soil erosion must be controlled.

a. Prior to the clearing/grubbing of a privately owned undeveloped lot, a request for approval should be submitted to the POA-ARB.
b. All corner pins should be identifiable to ensure there is no encroachment on a neighboring site.
c. The request should note the extent of the clearing/grubbing proposed.
d. The name of the proposed contractor should be noted on the request.

e. Property owner and or contractor must ensure that all debris is removed from the site for fire safety and aesthetic concerns. Fines may be imposed for failure to remove the created debris from the site.
f. The Undeveloped Lot mowing program requires only the first 10' of lot frontage be mowed and maintained. Otherwise, lots shall remain natural.
g. Homeowners shall not construct any structures on undeveloped lots.

2 New Construction Guidelines:

Prior to starting construction of a new residence, detailed plans of the residence must be submitted to the appropriate ARB, and a building permit must be issued by the City of Aiken. The appropriate ARB will conduct a review of the plans. It is required to use Appendix A-4, New Construction Checklist, to ensure an accurate submission and avoid unnecessary delay of review.

2.1 Submission & Review Requirements: Every new construction must be submitted to the appropriate ARB for approval and contain all of the following. To submit a new construction to the ARB, the Builder must first be approved. To find out about approved builder eligibility, contact the WPPOA Office. The following

guideline section will go over the required submission materials and process. The ARB acknowledges that construction submissions may sometimes be submitted in phases; however, it is the responsibility of the Builder to submit each phase of the project for approval prior to progressing.

2.1.1 Submission Fee & Deposit: There is a fee for the for the review of the application. The deposit is to ensure completion of the project as approved within the approved timeframe. The deposit will be returned when all construction items are completed as previously approved by the ARB. All builders will be required to sign a Deposit Acknowledgement Form. The ARB retains the right to withhold the fines levied against the construction site from the deposit if the fines are not paid by completion.

- **Fees and Deposit Schedule:** Fees for new construction in POA-ARB areas of jurisdiction shall be $450. Deposits are charged by the appropriate ARB to help insure work that impacts neighborhoods is completed on time and that proper clean up and repair of damage is accomplished.

  Contractors Security Deposit - The applicant or contractors are required to post a security deposit as security for compliance with the Building Guidelines. Deposit schedules may change from time-to-time. The current schedule for new construction is:

  New Home Construction $2,000

  Following the initial $2,000 deposit, the deposit amount will be decreased to $1,000 per home for more than one home under construction simultaneously by the same applicant and/or contractor. Every applicant is advised all deposits held by the appropriate ARB can be applied to correct deficiencies on any home. Any outstanding fines will be deducted from the deposit. Deposits are refunded, upon written request, after a final inspection is completed and approved by the appropriate ARB chairperson. Please allow a minimum of 30 days from the date of written notice to receive your deposit refund check.

  A “POA-ARB Construction Deposit Acknowledgment” form was implemented January 2023 and must be signed by each Builder who is approved to build in Woodside.

2.1.2 Site & Tree Stake Out: When submitting for new construction, the site should be staked and the trees to be saved should be marked. This should be done as soon as possible and before any clearing of the lot can begin. A stake-out of all vertical and horizontal construction must be approved by an on-site inspection (by an ARB member) preferably prior to the ARB meeting. The following items must be complete for the inspection:

- All property corners located with stakes a minimum of 3’ high and boundary

lines defined by string lines

- Footprint of the entire house and driveway defined by stakes (minimum of 3' high) connected by contiguous string lines
- All trees to remain on site must be flagged with orange/pink survey ribbon
- All undisturbed natural areas that are to be retained as a whole must be clearly marked with a continuous orange/pink survey ribbon

2.1.3 Dimensioned Site Plan: The site plan shall be drawn on a 24" x 36" size paper at a scale of 1" = 10'. A different scale is acceptable for large lots to be able to fit the entire drawing on the 24" x 36" sheet. The drawing shall include but not be limited to indicating street name and lot number, the footprint of the house (foundation), decks, patios (on grade or raised) labeled as such, walkways, HVAC units, generators, and electric & gas meters. Driveways (10' minimum width) and walks (4' min. width) shall be shown and dimensioned. The site plan must also include street name and lot number, all property lines, curb lines, setback lines, easements (and their dimensions), wetlands, buffers, contour lines and any prominent natural features or man-made features, such as golf courses, cart paths, lakes, and walking trails. Trash storage shall be indicated on plan as to be in garage or in a screened enclosure. A "New Home Construction" checklist (Appendix A-4) is required to be utilized to ensure an accurate submission.

Site plans must also include the following lot area calculations:

a) Roofed building footprint (heated and unheated) _____s.f.
b) Unroofed 1st floor decks/stairs/porch/patio ___s.f.
c) Total of A+ B _____s.f.
d) Driveway, walks, pool, ground level patios, etc. sq. ft.

e) Total of C + D _____s.f.
f) F. Total lot area ___s.f.
g) % Footprint coverage (C divided by F) __
(See specific % in Section 5)
h) % Improvements area - (E divided by F)
(Must be less than 50%)

Site plans must also include all of the following details:

- Dimensions shall be shown from property lines to the closest point of the house on all four sides.
- Water flow projected after project completion must be shown. Swales and berms must be marked on site plans and final locations must be on drainage/landscape plan.
- If proposed, roof leader drains and piping must be shown on the site plan. The roof piping should be shown connecting to a drain outlet structure or structures.
- Section 2.9.2, Soil Erosion Control, specifies elements that include silt fencing and temporary gravel driveways to be shown on the Site Plan.

- Trees to be saved must be shown on the Site Plan, matching what is flagged on the property and will provide the basis for a tree inspection by the appropriate ARB. Trees should be marked by (X) or drawn in.
- Undisturbed natural areas that the property owner wishes to retain must be clearly identified, outlined, inspected and approved in writing by the appropriate ARB before any site clearing can occur.

2.1.4 Elevations: The finished floor elevations for the house and the garage must be shown to the ARB. Elevations may be reviewed with initial submission or after the site plan is submitted, if not finalized at time of initial submission. All four (4) elevations are to be drawn to ¼" = 1' scale on 24" x 36" size paper.

(a) The front and rear elevations shall be drawn on (1) sheet and the left and right on another. The elevations should reflect the way the house is to be built including shutters, window trim, crawl space doors, doors, etc. The elevations should reflect the final grade that relates to the topography as closely as can be determined.

(b) Materials such as brick, stucco and vinyl are to be indicated on all elevations of the house. *Reversed reading plans will not be accepted.*

2.1.5 Floor Plans: Floor plans shall be drawn at ¼" = 1' scale on 24" x 36" paper, containing information necessary for construction. Interior floor plan changes that do not alter the footprint dimensions of the house may be made during construction without the appropriate ARB approval.

2.1.6 Color Sample: Proposed colors of exterior materials including siding, trim, brick, roofing, stucco, and lattice, shall be submitted on actual samples of materials proposed for use at a sample size considered reasonable to visualize appearance by the appropriate ARB. Color must be presented either with the initial submission or submitted at a later date when determined. These sample submissions are important to both the owner and the ARBs in evaluating the eventual appearance of the house as color chips often vary greatly from actual applications. The applicant shall provide a 12"x18" color and materials sample with the submittal.

2.1.7 Construction Application: Every new construction submission must be accompanied by a completed Application, Checklist, Deposit & Agreement Form. A color selections sheet for brick, siding, trim, shutters, roofing, doors and windows and also noted on the Application form. At the time of submission, the Application, Checklist, Color selections, Deposit & Agreement Form should be accompanied by all of the following:

- A Site Plan
- Building Elevations
- Color Selections sheet
- Check for deposit and fee

- A-4 Forms (filled out entirely)
- All available digital plans (all will be required by completion)

2.1.8 Plan & Design Modifications: Material deviations and changes to the construction of the plans are to be submitted to the appropriate ARB using the Construction Modification Request From (appendix A-12) for approval before implementation. Updated plans/documents with a corresponding revision number will need to accompany the form. Unapproved changes may result in deductions of your ARB deposit.

Curb cuts installed during construction are required to meet the Curb Cut specs in section 1.3.5. and in Appendix A-1. Any curb cuts installed during construction that do not meet the requirements listed in the above sections will result in fines to the builder and possible reconstruction of the curb at final inspection. Fining may take place even after construction is complete.

2.2 Meeting Attendance: The representative of the contractor is strongly encouraged to be present during the ARB meeting for all new builds. It is mandatory for first-time builders to attend the ARB meeting for approval to build in Woodside Plantation.

2.2.1 Meeting Materials: One (1) set of complete drawings must be digitally provided (PDF format) at the time of submission. One (1) set of complete paper drawings must be presented for review. The site plan will be required to remain with the ARB unless otherwise requested by the appropriate ARB. Upon approval of the plans, an email will be sent to the builder. The signed Construction Application Deposit & Agreement Form must accompany the drawings and the construction fee and deposit must have been paid. The Agreement form is to be completely filled out, listing all materials used on the house. Material deviations are to be submitted for approval before implementation. If the POA- ARB grants approval, an improvement permit will be issued at the ARB office. If the ARB fails to grant approval of the project, it will designate, in writing, the reasons for failure to grant approval, and if possible, make recommendations to obtain approval.

2.3 Project and Building Responsibility and Completion: A new home is considered a project with a builder as a Residential Contractor that may or may not take responsibility for landscape or other exterior appurtenances. The Covenants in Part 2, Article 1, Section 6 states that "…dwellings and other structures" must be completed within twelve (12) months after the construction of same shall have commenced…" Since 1999 the Building Guidelines have held that completion of construction occurs when the home is ready for occupancy as evidenced by issuance of a CO (Certificate of Occupancy). This building completion does not constitute a finished project. If the builder hands off the project to the homeowner for the exterior work, he needs written confirmation from the homeowner that can be lodged with the appropriate ARB. The ARB may require a deposit from the homeowner.

The Covenants in Section 6 states that "Landscaping plans for all Dwelling Units and other structures must be completely implemented within ninety (90) days of the occupancy or issuance of a Certificate of Occupancy, whichever date shall first occur."

It is the intent of the ARBs to provide a final inspection for both the home as well as the landscape and exterior appurtenances. After the project is approved, project completion is then attained. At that point the homeowner is the Contractor and takes responsibility for any subs that are brought in.

It is important and necessary for the appropriate ARB to know who has responsibility for the lot and any impact the work may have on neighbors, common area, streets, etc. throughout the hand-offs in this process.

2.3.1 Building Permit Expiration: From the date of the building permit, approval is good for one (1) year for new construction and improvements.

2.3.2 New Home Construction Lot Signs: Only the home builder may have a job construction sign. Sub-contractors and contractors for home improvement jobs are not allowed to provide signs. These signs are required for all new constructions to assist in identifying lot locations and must be visible from the street.

Lot signs shall be constructed as per drawing in Appendix A-3. Lot signs are to have green lettering on a white background. The size is to be 24" horizontal by 18" vertical with 2 ½" maximum lettering size on aluminum. The backing for this sign can be as desired by the builder with a plywood backing material preferred. The posts are to be 4" x 4", cedar, redwood or pressure treated lumber. The "Home of" and lot numbers are required. The "Home of" and lot numbers sign shall be 18" horizontal by 12" vertical with 2 ½" maximum size with green lettering on aluminum material. The address if known should also be displayed. Posts shall be stained the mailbox grey color. Contact the POA Office for specific color details. The framework including back shall be stained Charleston green.

Logo type graphics may be allowed with the appropriate ARB approval. No marketing messages shall be allowed. No information boxes are allowed. The builders shall be responsible for maintenance of their signs.

See Appendix, A-3, for detailed new construction signage specifications.

2.3.3 General Regulations: Builders of residences within Woodside Plantation must be licensed by the State of South Carolina and must also have a City of Aiken business license. To be qualified builders must provide pictures of three homes that they built within the last three years. The homes must be comparable to Woodside Plantation homes. Builders must also supply associated references. Access to the Woodside Plantation is controlled by guard staff located near the entry gate. Builders and vendors must purchase passes from the WPPOA Office. Incoming vehicles must stop at the entrance gate at East Gate, Village Gate or

Anderson Pond Gate showing the authorizing pass or vendor decal. Construction workers are allowed access to and from the construction site only and are strictly forbidden from riding about Woodside Plantation. Construction vehicles should be parked on the construction site whenever possible. If not possible, construction vehicles shall be parked on the street in front of the construction site and on the same side of the street as the construction site unless parking on the same side would prohibit emergency vehicles to pass or create a line-of-sight issue.

The conduct of workmen is the responsibility of the general contractor. Workmen are not allowed to use club facilities nor fish in Woodside Plantation's lakes without the presence of a property owner. Loud music from radios and disturbing property owners or guests is not permitted.

The above regulations are designed to enhance Woodside Plantation's overall appearance to our residents and visitors. These regulations are to be used as guidelines and are not intended to restrict, penalize, or impede construction firms who adhere to these regulations while performing their duties on Woodside Plantation. Repeated violation of these regulations could result in the suspension of the building approval for that residence until corrective action has been taken by the contractor. Additionally, a contractor who repeatedly violates either the letter or spirit of these guidelines may be subject to fines or may be prohibited from working in Woodside Plantation.

2.3.4 Work Hours

Workers are permitted to work from 7:00 am to 6:30 pm Monday to Friday. Quiet inside work can continue until 12:00 midnight. Quiet outside work that does not disturb the neighbors is permitted any weekday until 9 pm. Weekend access for workers begins on Saturday from 8:00 am to 6:30 pm and on Sunday from 9:00 am to 6:30 pm. All weekend work must cease at 6:30 pm.

2.3.5 Clearing/Grubbing for New Construction: Prior to the clearing/grubbing of a Undeveloped lot, a request for approval must be submitted to the POA-ARB.

- The application form should indicate the lot corners, the building envelope, the proposed location of the display sign and the location of all trees that will be removed.
- All physical corner pins should be clearly marked to ensure there is no encroachment on a neighboring site.
- The request should note the extent of the clearing/grubbing proposed.
- In order to provide access to and space for the display sign, it may be deemed necessary to remove healthy trees larger than four (4) inches or greater in diameter, measured at a height of four feet above grade. In all cases, these trees should be "tagged" for approval by the ARB before removal.
- The name of any additional contractor to be used in clearing/grubbing or tree removal must be noted on the request form.

- A representative of the POA-ARB will review the request within 7-10 business days of the request.
- The installer will be notified of approval, conditional approval, or disapproval, within two business days of decision.
- Arrangements must be made to ensure all debris is removed from the site.
- Fines can be imposed for failure to remove the created debris from the site.

2.3.6 Tree Protection and Removal for New Construction: The purpose and intent of this section is to establish protective guidelines for trees in Woodside Plantation which will result in the utilization of existing trees as landscape elements. These guidelines are not intended to cause undue hardship to any individual using reasonable care and diligence in protecting existing trees on his homesite or parcel, but are intended to encourage protection of trees during the land clearing and construction phases of development to ensure the maintenance of the natural setting. These guidelines apply to all developed residential building lots in Woodside Plantation.
No tree, with a trunk diameter of four inches (4) or greater, measured at a height of four feet above grade, shall be removed or effectively removed through damage while in preparation of, in connection with, or in anticipation of development of any homesite or parcel without prior approval of the appropriate ARB. A tree removal application is available from the WPPOA office.

Approval for the removal of trees located within ten (10) feet of the main dwelling, or other approved structures, will be granted, however, the ARBs reserve the right to request the tree be replaced in another location. The ARB reserves the right to have specimen trees preserved and may require that the site planning provide for their retention.

For approval to be given to remove a tree, typically at least one of the following conditions must exist:
- Trees that prevent the development of a parcel or homesite or the physical use thereof
- Trees which prevent access to a parcel of land
- Trees which pose a safety hazard to pedestrians, vehicles, buildings or other structures
- Trees which threaten to cause damage or disruption to public utilities
- Trees which are diseased, injured, or sufficiently weakened so as to threaten or cause damage to persons or property
- Trees which require removal for reasons other than set forth herein where it is determined to be in the public interest
- Trees that severely impair a major view amenity
- Trees that severely affect the drainage or topography of a residence

The POA-ARB reserves the right to require replacement of any tree to be removed. The

following conditions, not limited to, but will likely require a replacement tree be planted:

- Trees determined to be of great aesthetic value or that may greatly affect surrounding aesthetics
- Large caliper trees
- If more than 2 trees are being removed of significant caliper, as determined by the ARB.
- Trees that, if removed would affect privacy of surrounding properties
- Trees that create required softening from the golf course

Please note that often, replacement trees will not be required to planted in the same location of the tree to be removed. The goal of the ARB is to effectively maintain the presence of trees while working with property owners to achieve property goals.

Ribbon and/or flagging on trees is to be retained and undisturbed natural areas must remain in place on trees until construction and landscaping have been completed and must be accurately noted on the site plan. Steps must be taken to protect trees and undisturbed natural areas designated to be saved. There must be no clearing for: equipment or storage, disposal of materials such as paints, solvents, or oils within the perimeter of the limb coverage, "drip line," of any tree to be preserved. In addition, no attachments of any kind may be fastened to a tree designated to be preserved.

2.4 **Pre-Construction:** After completing the review process and receiving approval of the stake- out and construction documents from the appropriate ARB, several steps shall be followed before lot clearing, material deliveries or construction may begin.

An ARB approval must be obtained for new construction. One (1) set of the construction drawings must be approved and stamped by the appropriate ARB. The applicant must also submit a completed construction deposit form along with the required deposit and fees. A lot approval letter will be issued after the ARB has approved the construction plans. The receipt of this letter does not preclude the necessity of also obtaining a City of Aiken building permit. Both documents are required for construction along with additional permits that may be necessary from other agencies. Silt fences or other facilities to prevent erosion and damage to lakes, golf courses or adjacent properties, are required based on plan review. Additional information on erosion control is in Section 4.6.3.

The contractor should familiarize himself, his employees and subcontractors with all the requirements of the Building Guidelines. The applicant is responsible for the actions of their contractors, subcontractors or other vendors providing goods and services for all issues pertaining to these guidelines. Any questions on these guidelines should be resolved prior to or during the review process.

- Prior to the review meeting, the lot must be staked out, trees to be retained must be flagged on site, properly located on the site plan, and the site inspected and approved by the appropriate ARB.
- Digital plans (full set), a scale drawing of site plan, specifications, colors and

material samples must be submitted to the ARB office no later than the Wednesday before the scheduled meeting.

- No site clearing or material delivery can be done until the submission has been reviewed, approved and an ARB improvement permit issued unless otherwise noted by the appropriate ARB. A City of Aiken building permit must also be obtained.
- At the beginning of foundation work temporary toilet facilities must be available and a trash receptacle must be located at the site. Exceptions may be approved by the appropriate ARB.
- Inspections will be made by the ARB during the project. The applicant and/or contractor must notify the ARB (1) at full enclosure with roof and windows installed, and (2) after completion of home, and (3) final site grade and installation of landscaping when the project is complete. A copy of the foundation survey must be submitted to the ARB before any final approval can be granted.
- If any exterior changes are necessary in the approved plans, these changes must be reviewed and approved by the ARB before such changes are made in the field.

- (see 2.1.8 Plan & Design Modifications) Applicants and/or contractors are urged to consult the ARB if they are not certain as to whether a change is substantial. Failure to follow these guidelines and/or any substantial deviation from plans as approved by the ARB may result in suspension of construction and/or a fine.

2.5 During Construction: Construction in Woodside Plantation will be under constant observation by the ARB. Inspection details are in Section 2.8, Building Site Inspections.

Each construction site is required to have a sanitary facility (Port-o-Potty) for the use of workers. It should be placed on the site, at least five (5) feet from the street, in the most inconspicuous location possible, with the door facing away from the street and neighboring homes, and should remain in place until a certificate of occupancy is issued or received. Exceptions or other requests can be made by the appropriate ARB. Care should be taken when loading trucks hauling trash so as not to have it spill over while in transit. Contractors shall be held responsible for trash and debris falling from construction vehicles.

It is imperative that sites be maintained in a clean and tidy manner. Construction materials must be kept within the property lines maintaining a clear street right-of-way. Access to the site shall be limited to the proposed driveway location. Access over/through adjoining properties is expressly forbidden. The storage of materials should be in an inconspicuous area of the site and should be neat and orderly. The use of adjoining properties for access and/or storage of materials, without the written permission of the adjacent owner, is prohibited. Written permission must be presented to the appropriate ARB. Property used without permission will result in a fine. Construction trailers are not allowed on developed lots or sites. Construction trailers may be placed on construction sites only for the duration of the project.

Site cleanliness shall be maintained at all times. If not maintained, the appropriate ARB may impose fines or may issue a Stop Work Order. A commercial receptacle or other appropriate container shall be placed on each job site and shall be replaced when necessary. At the end of each workday, materials must be stored neatly and trash placed in the dumpster. No trash shall be strewn about the lot or piled openly. As untidy sites present a negative image to visitors and property owners, this requirement shall be strictly enforced. Should the appropriate ARB determine, in its sole discretion, that a site is not being maintained properly, it may undertake to have it maintained properly and will deduct the cost from the construction deposit.

Temporary utilities should be installed in a neat manner.

If at any point during construction the building contractor feels that another contractor or subcontractor, i.e. well driller, landscaper, etc., whether hired by the builder or the project owner, should be responsible for something, i.e. drainage, erosion, etc., a statement of responsibility should be obtained from said subcontractor, indicating that he (it) is responsible for whatever (silt fences, etc.). A copy of this statement must be provided to the appropriate ARB, or the contractor will remain responsible and potentially the entity that is reprimanded and/or fined.

2.6 New Construction Landscaping: The appropriate ARB provides input to all new construction Landscape Plans and final approval for all other Landscape Plans. The appropriate ARB may provide preliminary approval for Landscape Plans for commencement of construction, but reserves its right to approve or disapprove final landscape installation as a result of deviation from approved Plans, site conditions on the lot not apparent on the Landscape Plans, drainage and other conditions reasonably necessary to provide landscaping in keeping with the neighborhood.

The Landscape Plans shall be submitted for approval review four (4) weeks prior to the projected installation date. This will allow for review and revision of the plans, as necessary. Any company starting construction without approved and signed plans shall be fined.

Landscape plans for new construction must be submitted for approval to the WD or POA-ARB no later than two weeks after full enclosure is achieved). Additional information on landscaping can be found in Section 1.7. Landscaping for new construction is to be completed within 90 days of occupancy or issuance of a Certificate of Occupancy; whatever date shall first occur.

Every site shall be strung with tape or string to physically indicate the parcel property lines. All improvements must be limited to the identified parcel. Stringing shall remain obvious and in place during all landscape construction.

All landscaping must meet the requirements set forth in the General Guidelines section 1.7.1 in addition to the following guidelines and procedures for new construction. The appropriate ARB must approve all Landscape Plans for new construction.

2.6.1 Deposit: If the landscaping is not included in a builder's contract for a home or at any point a lot owner decides to outsource the landscaping, the lot owner is responsible for providing Landscape Plans and performance of the landscape work. To ensure compliance with this requirement, the ARBs shall require the lot owner to pay a deposit that will be refunded upon completion of all of the work. The deposit should be accompanied by an Agreement to Landscape form. Otherwise, the Construction Deposit covers the responsibility of landscaping to completion.

2.6.2 Plans: All Landscape Plans shall be submitted on a 24" x 36" sheet at a scale of 1" = 10'. The Landscape Plans must have a plant legend and the contractor's name and phone number and meet the appropriate guidelines.

a. All plant material shall be specified in the legend by common name and variety, size of material in inches or feet and by spread (spr) or height (ht) at the time of planting and must be identified in the plan numerically (example below). Container capacity (size) is a secondary specification; (height or spread shall be determined by plant type and habit, i.e.: Juniper – spr; Azalea, Camellia etc.)

Example:

ID No. on Plan	Common Name	Species	Quantity	Size
1	Juniper	Juniperus	5	3 Gal.
2	Azalea	Rhododendron	4	3 Gal.

Legends are required to use numbers to identify plant varieties like above. Plans shall also show the location of any contemplated landscape lighting, walks, fences, pools, decks and patios/pads. If the decks, patios, pads or any other structure that would add to the lot coverage was not initially included on the site plan, it will need to be submitted on that first.

Use numbers to represent existing and proposed plant material. Symbols or abbreviations can be used in conjunction with, but numbers must be present in the location of the plant variety to clearly identify plant material. All plant material should be shown at the proposed spacing (based on the size of the plant at its mature width).

b. Landscape plans must show the lot and curb lines, all existing and proposed improvements, including all hardscapes, as well as a planting plan. Landscape Plans must provide for sod, ground cover, undisturbed natural areas, created natural areas or hardscape of the entire lot. No bare earth is permitted.

c. Any structures or appurtenances to be installed on ground level pads must be identified at the time of submission (i.e. hot tubs, firepits, generators).

d. Additionally, all decks, patios, wall, porches etc., must be specified on the plan and

screened appropriately. See section 1.7.4, Screening.

e. Materials compatible with the exterior of the home or 7gal or above evergreen plant screening shall be provided for HVAC units, generators, service yards. See Section 1.7.4 for further details on screening.

f. The contractor shall be responsible for locating existing utilities before excavating.

g. Expected water flow must be shown on the initial landscape plan however detailed drainage will be required on the drainage plan. See Section 1.7.2. and Section 2.6.3. Proper drainage plans showing the flow of storm water and detailed drainage systems in place will be required in final phases of construction. The appropriate ARB may request the services of a civil engineer at the expense of the applicant on homesites that are severe in slope to design a drainage plan ensuring its ability to properly drain the homesite without negatively impacting adjacent properties with flowing water. (Landscape plans must be submitted for approval to the WD or POA-ARB no later than two weeks after full enclosure is achieved) Additional information on landscaping can be found in Section 1.7.
Landscaping is to be completed within 90 days of issuance of a Certificate of Occupancy.

h. Plans shall show all swales, berms and any grading required to control and prevent soil erosion. Needed adaptations to the plan will need to be shown on the drainage plan required in the final phases of construction. Grading shall provide that all slopes with sod be no steeper than 2' horizontal to 1' vertical (2:1). All slopes with vegetated groundcover, pine straw or mulch shall not exceed 3 feet horizontal to 1' vertical (3:1). Storm water shall be directed as best as possible to the front curb line or rear lot line to avoid adjacent residential properties.

i. All drainage structures, inlets, leaders (downspouts) including existing drainage structures and piping with sizes will be required to be shown on the Drainage plan, however readily known drainage control should be shown in landscape plans.

j. Show all utilities, including electric transformers and meters, gas meters, telephone, cable, water heater and HVAC, etc., on Plans. Plantings should be installed so that there is a five (5) foot clearance around the entire box. The utility companies have the right to trim and cut plantings around the boxes if they interfere with access.

k. Utilities and meters, on or close to the structure must be accurately shown on the plans and must be screened on front, rear and sides. It is required that there is at least one (1) foot clearance on each side of the meter.

l. The Plans must identify all trees to be saved on the lot. Removal of undergrowth and pruning of trees is permitted.

m. If a natural area is to remain, it must be designated on the plan. The natural area will be protected from mechanical grubbing, parking of construction vehicles/equipment, storage of construction materials, placement of job site toilets or dumpsters. Natural Areas planned to be in Front Yards must be approved by the appropriate ARB. Front yards should not be excluded from having “natural areas”, as some lots lend to this feature determination an will be approved on a “case by case” situation.

n. All decorative walls, retaining walls, patios, arbors, water features, gazebos, and other structural items must be shown on plans.

o. The use of brick, stones, gravel, pebbles, lava rocks, pavers and other inorganic materials shall not predominate over the use of organic plant materials and are each approved at the appropriate ARB’s discretion.

2.6.3 **Drainage Plan:** Drainage plans shall be drawn on a 24” x 36” sheet, preferably mapped over the approved final landscape plan, to a scale of 1” 10’, must cover the entire property and all elements should be clearly labeled. Drainage plans shall be provided to the appropriate ARB no more than 30 days following the approval of the final landscape plan. Drainage plans are to detail all water erosion and storm water control measure put in place throughout the

build; to include any swales, berms, catch basins, pop-ups, piping, gutters, rain chains and where they are buried/how they drain, rip-rap, French drains, etc. that were implemented. An “AS BUILT” of drainage essentially.

Grading and landscaping for drainage, whether rain or irrigation water, is a requirement. Planning ahead is necessary to ensure proper drainage flow from the lot into Woodside Plantation’s drainage system. Adjacent properties must not be adversely affected. If water run-off problems exist, the ARBs have the right to require remedial improvements at the homeowner’s expense. Proper drainage plans showing the flow of storm water and detailed drainage systems in place will be required in conjunction with the landscape plan submittal. (See Section 1.7.2).

a. Discharge may be accommodated in drainage structures

b. If applicable drainage plans will require a legend to show pipe size variations and any symbols used to indicate specific drainage elements.

c. All water outlets such as pop-ups, are required to remain a minimum 2 foot from golf course property lines.

Responsibility of adequately installed drainage is regarded to the professionals in the field however; the appropriate ARB retains the right to request that these plans be presented and reviewed for approval prior to install. The Drainage Plan must be on record before deposits are refunded.

Please refer to General Guidelines, for additional requirements regarding Landscaping & Hardscapes.

2.7 Post Construction: When the construction of a residence has been completed, the owner and contractor must satisfy several requirements before applying for the final inspection.

- The construction of the residence shall be completed as per approved plans and the landscaping shall be installed conforming to the plans previously approved by the ARB. The ARB reserves the right to make additional requirements for soil erosion control to satisfy issues resulting from water runoff. Unauthorized changes must be corrected before a final inspection certificate will be issued.
- Upon completion of construction and landscaping, building debris and all silt fence and other temporary erosion control measures shall be removed from the site and the surrounding area. The construction site sign and the temporary power pole shall also be removed. At this time, the applicant and/or contractor should notify the appropriate ARB that the site is ready for the final inspection.

2.8 Construction Inspections: The following section will break down the different inspections that each construction site is subject to. The POA-ARB is responsible for all Final Inspections, regardless of what ARB performed the initial review.

2.8.1 General Inspection Process: Inspections are made to assist in efficient progress of construction. The various inspections described below may be increased or deleted on a case-by-case basis.

2.8.2 Lot Stake Out Inspection: Before a plan is reviewed by the appropriate ARB, the lot shall be staked out to show the outline of the entire lot and the basic outline of the house. The inspector will look at the siting of the home and for any impact that it may have on adjacent properties, and if adequate tree conservation is proposed.

2.8.3 Tree Inspection: The preparation for this inspection includes flagging of trees the owner/builder proposes to save. The locations for the trees are to be marked on the plan to match the flagged trees.

2.8.4 Foundation Lay Out Inspection: Professional foundation surveys, by a licensed surveyor, are required and must be submitted to the appropriate ARB within two weeks of foundation installation and before vertical construction starts.

2.8.5 During Construction Inspection: The contractor is responsible for inspecting the site to ensure it continuously remains clean, orderly, and that erosion control facilities remain in place and effective. While these inspections are the responsibility of the contractor, the POA-ARB will perform similar inspections throughout the term of the project to ensure compliance.

2.8.6 Landscape Site Inspections: The POA-ARB will provide inspections to verify that work was done according to plan including erosion control facilities.

2.8.7 Final Inspection: It is the builder's responsibility to notify the appropriate ARB when the project is completed. All final inspections are performed by the POA-ARB. This inspection is to verify the house is complete and built to the approved plan in order for the deposit to be returned. There are two inspections. One is the house itself, and the other is the landscaping. New construction is not considered complete until both the installed landscaping and home are completed and approved. All signs and temporary utility poles must be down and removed. The drainage must be satisfactory and not discharging on adjacent property in an unacceptable manner. Any damage to adjacent properties must be repaired. Other requirements may be determined by the ARBs at that time. Any problems that materialize after this inspection and after return of the deposit will be required to be remedied at the owner's expense.

2.9 New Construction Dwelling & Site Design: Section 1.1, Architectural Design, breaks down the design criteria used for New Construction as well as Home Improvements other than the few specific guidelines that follow.

2.9.1 Gutters: Gutters may be required at the appropriate ARBs discretion to alleviate erosion and water flow issues. If gutters are deemed necessary, they must be installed and buried. All gutters must be shown on the drainage plan. The downspouts or rain chains and water flow must be on drainage plans. These must be submitted to the appropriate ARB for approval (see section 1.7.2 Drainage Plan).

2.9.2 Soil Erosion Control: Clearing of the lot is limited to the minimum area required to construct the house, and the lot perimeter will remain natural and undisturbed to the maximum extent possible during the period of construction. This area must be noted on the site plan submitted for approval.

For waterfront properties, additional clearing to the shore line may be approved with the final landscape plan and must be done coincident with that work to minimize soil erosion into the body of water. Any soil erosion into the lake must be remediated.

Silt fences are required at the perimeter of the cleared area as needed. Natural flow of water crossing the cleared area is required to have slit fencing at the critical lines to stop soil erosion

For waterfront properties:

- At least 1 silt fence is required 10 feet uphill from the natural and undisturbed area to control silt ladened runoff entering the body of water
- A secondary line of anchored straw bales must be installed downstream of the slit fence and above the natural and undisturbed area
- Additional silt fences along the side lot lines that have berms to prevent storm water from crossing the side lot lines must be installed to reduce silt ladened storm water from reaching the body of water

- If the grade of the lot above the natural and undisturbed shoreline has a pitch greater than 4:1, then a second crosswise slit fence should be installed parallel to the primary silt fence and the line of anchored straw bales

2.10 Other Special Restrictions Affecting Building Contractors:

2.10.1 Fines Schedule: Fines are set through the Covenants and its Amendments.

"The Board of Directors shall have the power to impose reasonable fines to enforce the Covenants and Amendments, the Building Guidelines of Woodside Plantation, latest edition, and any other rules and regulations it may, from time to time, adopt and publish…"

"In the event that such Property Owner, Visitor, Vendor, Contractor or Sub-contractor fails to comply with any published and distributed portion found within the existing Covenants, Amendments, Building Guidelines of Woodside Plantation, latest edition, Rules and Regulations, which may be published over time, such entity may be subject to fines from $100.00 up to $300.00 per violation, and/or a fine in the amount of $25.00 per day until said violation is satisfactorily remedied, commencing with a date ten (10) days from written notice (where applicable) of said violation. In addition to any fine, the cost to repair, replace or correct, if applicable, may be added and will become the responsibility of the person or persons so fined."

Guidelines for the Appeal Process Pertaining to Fines and Penalties are available through the WPPOA Association Manager.

2.10.2 Construction/Job Site Signs: A builder's sign, conforming to WPPOA's approved signs, (See Appendix A-3), must be placed on the lot. No other sign of any description is permitted on the lot during construction unless approved by the ARBs. No signs or other items are to be attached to existing trees on the lot. Signs must be displayed on the front of the lot near the existing road frontage and include the builder's name, the property owner last name, and the lot number and/or address of the site.

2.10.3 Burning: The City of Aiken Municipal Ordinance prohibits burning leaves, limbs, and other yard debris within city limits. Fires for cooking or in approved enclosures (fire pits, chimneys, grills) are allowed if they don't create nuisances. All job site burning must take place in a container designed for burning, no larger than 24" in diameter or 2' x 2'. All fires must be extinguished when lot is unoccupied. All burning should be closely monitored at all times.

3 Existing Home Improvement & Alterations:

The purpose of an ARB is to review the proposed building, remodeling, and/or alteration activity, and to encourage high quality architectural design and characteristics appropriate to the surroundings and the special conditions of climate and other environmental factors indigenous to the area. **Although several HOAs exist within Woodside Plantation, approval authority comes from either the WD-ARB or the POA-ARB.**

This review process has been set up to establish a systematic and uniform review of proposed construction. Required drawings and submittal forms must be completed prior to submission for review. Submittals to the ARBs for new construction are required to be made by an architect, an ARB approved design professional, or the building contractor. Designers should strive to develop a strong sense of identity within a framework of visual continuity to create an attractive and harmonious addition to the community. It is not the intention of these Boards to stifle creativity in producing a strong identity, provided the design conforms to the Covenants and these Guidelines. The ARBs, however, through their procedures, may approve or disapprove proposed construction on purely aesthetic grounds, where, in their sole judgment, such action is required to protect the enduring natural beauty and attractiveness of an area.

No site clearing (other than minimum clearing for stake out), material deliveries, or construction may begin without first obtaining permit approval from the appropriate ARB and the City of Aiken construction permit. These permits must be posted before construction begins.

Both ARBs generally meet twice a month and may meet as needed. Submittals must be received at the appropriate ARB office no later than the Wednesday prior to the next scheduled ARB meeting. Submittals shall be accompanied by a completed Architectural Review Board form (A-10) and corresponding plan review checklist. Review fees must also be paid in full for a submittal to receive consideration. If there are unresolved questions concerning the submission, the review may be rescheduled to the next meeting of the ARB to obtain information from the applicant or others. Failure to adhere to these guidelines may result in penalties outlined in the covenants.

As stated in the Covenants, no alteration, including painting or staining, affecting the exterior appearance of any existing building or structure or any significant landscape change shall be made without prior written approval of the POA-ARB. A request for plan approval must be submitted to the POA-ARB and must include the review fee (if applicable), a completed improvement review form (A-10), drawings necessary to define the proposed improvement, and color samples. When repainting or re-staining a building or replacing roof shingles, the use of the same exterior colors is generally encouraged and does require approval. If the selected colors are different from those existing, appropriate samples must be presented for approval to the POA-ARB before work begins. House additions, improvements and modifications shall be architecturally compatible with the existing house.

3.1 Improvement & Alterations Process: Generally, no exterior building alteration or site improvements are allowed until written approval by the appropriate ARB as stated in the Covenants. Planting additions, considered minor in nature, (removing dead plants and installing new ones; adding a few new plants) are allowed without ARB approval. No improvements shall be approved until the proposed building or alteration plans including elevations, material
specifications, finishes, colors, revised site and landscape plans and an improvement schedule have been approved in writing by the POA-ARB. The applicants are required to fill out and submit the checklist for "Property Improvements and Alterations" (Appendix A-5). When submitting a request of proposed improvements, such application must include, but may not be limited to the following:

3.1.1 Letter of Intent (Improvement Review Form): The owner should inform the Board as to the intent and purpose of the proposed improvements by completing an Improvement Review Form (Appendix A-10) based on these Guidelines.

3.1.2 Completed Improvement Review Form: The POA-ARB will grant approval or indicate in writing its reasons for failure to grant approval, and may make recommendations to obtain approval.
The submittal and deposit, (See Appendix, A-1c) when applicable, must accompany the completed improvement form and complete submission and/or drawings will be stamped before issuing an ARB improvement permit approval (via email). As specified in the construction guidelines, the POA-ARB permit and City of Aiken permit, if required, must be displayed before site clearing, material delivery, or commencement of construction. The review form must contain dates, even if approximate, for start and completion of the project. The homeowner is to sign the improvement form before final approval is granted.

3.1.3 Site Plan: A dimensioned site plan of the property must be submitted showing the location(s), shape, dimensions and materials to be used for the proposed improvements. If an adequate site plan is not available, a survey will be required at the property owner expense.

3.1.4 Drawings: Sufficient plans and elevations shall be submitted to adequately define, dimension and explain the improvement. Scaled drawings representing existing structure(s) shall be submitted.

3.1.5 Color Samples: Samples are important when applying for improvement approval because of the necessity of matching existing materials and the look and feel they provide, e.g. glossy vs. satin finish. Color chips or manufacturer's color names and numbers should be submitted. The ARB requires that color samples for property improvement are as follows:

- Accent colors or features such as trim, soffits, shutters, doors etc., require a 4"x4" or 9"x2" sample size. *The POA-ARB has a paint sample library available for use by residents. (color # and brand must be known)
- Whole house paint or more than 50% change in color will require an 8"x11" sample

- Should an 8”x11” sample not provide an adequate visual of color, the appropriate ARB may request to see an inconspicuous area of house painted with a sample of the color.

3.1.6 Fees and Deposit Schedule for Improvements: Effective March 2013, there is up to a $1000 deposit for all major improvements and some minor improvements to insure compliance with the Building Guidelines, such as but not limited to:

House additions or major exterior renovation, replacement of roof shingle with a trailer or dumpster on site, roof modifications, siding replacement, pool, POD, dumpster placement or Port-O-Potty placement, major exterior modification, curb cut, driveway renovations, major landscape renovation/modification, driveway modification, etc.

Contact the POA office for detailed ARB Deposit Fee Schedule or check the WPPOA website. The deposit will be returned after completion of the project as approved and inspected where appropriate. Deposits are refunded, upon written request, after a final inspection is completed and approved by the appropriate ARB chairperson. Please allow a minimum of 30 days from the date of written notice to receive your deposit refund check.

An “ARB Deposit Acknowledgment” form was implemented in January 2023. All deposits taken by the POA-ARB must be accompanied by a form.

3.1.7 Fines Schedule: Fines are set through the Covenants and its Amendments.

“The Board of Directors shall have the power to impose reasonable fines to enforce the Covenants and Amendments, the Building Guidelines of Woodside Plantation, latest edition, and any other rules and regulations it may, from time to time, adopt and publish…”

“In the event that such Property Owner, Visitor, Vendor, Contractor or Sub-contractor fails to comply with any published and distributed portion found within the existing Covenants, Amendments, Building Guidelines of Woodside Plantation, latest edition, Rules and Regulations, which may be published over time, such entity may be subject to fines from
$100.00 up to $300.00 per violation, and/or a fine in the amount of $25.00 per day until said violation is satisfactorily remedied, commencing with a date ten (10) days from written notice (where applicable) of said violation. In addition to any fine, the cost to repair, replace or correct, if applicable, may be added and will become the responsibility of the person or persons so fined.”

Guidelines for the Appeal Process Pertaining to Fines and Penalties are available through the WPPOA Board of Directors and Association Manager.

3.2 **Landscape Improvements:** While each new home is required to submit a landscape plan, it is anticipated that homeowners may replace, renew and repair their plantings on a continuous basis. Tree removal, replacing sod with mulch, major landscape and hardscape changes require approval from the POA-ARB.

Details on Landscaping submission and requirements can be found in section 1.7 of this document.

3.3 **Improvement Site Inspections:** For certain home improvements or modifications, inspections may be required. The requirement for inspection will be determined on a case-by- case basis by the ARB at the time of project approval and such requirement will be noted in the project “approval letter.

Section 4 - RESERVED

5 - Specific Guidelines by Community:

The General Guidelines apply to all construction in Woodside Plantation. However, there are specific guidelines developed for each designated neighborhood. The following are specifics guidelines developed for each particular community in Woodside Plantation.

5.0 Phases I & II Single Family Homesites (Unless shown in a specific section):

5.0.1 Lot Coverage: First floor enclosed area of a Single Family Home may not be constructed so as to cover or occupy, including garages, carports, screened and/or roof covered porches, more than 35% of the entire area of the lot. Maximum total coverage to include decks, patios, walkways, driveways, pools and other improvements is not to exceed 50% of the total lot area.

5.0.2 Minimum Sq. Ft.: Minimum area shall be 1750 sq. ft. of heated and/or cooled space which shall be measured outside to outside exterior walls. In the event of a 2-story structure, the first floor must be a minimum of 1100 sq. ft.

5.0.3 Minimum Setbacks: The following are minimum setbacks, unless shown differently on applicable recorded plats:

- **Front (or side yard adjoining street) 35 ft.**
- **Side (or rear) yard adjoining golf course 30 ft.**
- **Side (or rear) yard adjoining lake 20 ft.**
- **Side (or rear) yard adjoining another yard or wooded area:**
- **Existing developments 12 ½ ft.**
- **In new developments if not specified 10 ft.**
- **Property line to side edge of driveway:**

  3 ft. (1 foot minimum at turn around areas by garages)
- **Service yards 5 ft.**

<u>5.1</u> <u>Patio "Privacy" Homesites to include:</u> Juniper Loop, Sweet Gum Lane, Sweet Gum Ct., Crane Ct. and Baldcypress Ct., Hunter's Run and Hackberry Lane (Phase II, no privacy wall).

<u>5.1.1</u> <u>Lot Coverage:</u> First floor enclosed area of a Patio Home may not be constructed so as to cover or occupy, including garages, carports, screened and/or

roof covered porches, more than 45% of the entire area of the Patio lot. Maximum total coverage to include decks, patios, walkways, driveways, pools and other improvements is not to exceed 50% of the total lot area.

5.1.2 Minimum Sq. Ft.: Minimum area shall be 1200 sq. ft. of heated and/or cooled space measured outside to outside of exterior walls. Dwelling units shall be limited to a maximum of two (2) stories in height.

5.1.3 Minimum Setbacks: Setback requirements apply to all architectural elements integrated within the enclosed habitable space of a patio home which is covered by roof. In addition, decks, *excluding* those facing golf course or lake, may be permitted outside the lot setbacks subject to approval by the ARB.

The City requires 20' between houses when one of the houses is a 2-story and 15' between houses when the houses are 1 story.

- Front yard adjoining street with garage opening toward street 15 ft.
- Front yard adjoining street with garage opening toward side lot line 5 ft.
- Side yard adjoining street 20 ft.
- Side yard at privacy wall lot line 3 ft.
- Side yard opposite privacy wall lot line on all other patio lots (from lot line or easement if easement is shown on applicable recorded plat) 17 ft.
- Side yard opposite privacy wall lot line in Section 2 (Juniper Loop) only (from lot line or easement if easement is shown on recorded plats). Juniper Loop is grandfathered with a 15' minimum between homes 12 ft.
- Rear yard adjoining golf course or lake 20 ft.
- Rear yard adjoining another yard or wooded area 15 ft.
- Service yard/HVAC 10 ft.
  * HVAC units are to be located on the non-privacy (17' min.) side of the home.

5.1.4 Additional Requirements:

Alternative Location of Dwelling: Should an owner of a patio lot desire to locate his patio home on a portion of the lot other than contiguous to the privacy wall, he may apply to the appropriate ARB for approval of the alternative location. A site plan showing the proposed alternative location shall accompany such application. The ARB's approval of the alternative location shall not relieve the owner's responsibility to construct a privacy wall. Approval or disapproval of an application for alternative location of a patio home may be based purely on aesthetic considerations by the ARBs.

Easement Adjacent to Privacy Wall: There shall be reserved a 3- foot easement on each lot between the exterior of the privacy wall and/or dwelling unit and the parallel lot boundary line for the use and enjoyment of the adjacent lot owner, only as hereinafter provided. Said 3-foot easement area and the exterior of the privacy wall and/or patio home may be used by an

adjacent lot owner only for the planting and care of shrubbery and other landscaping, providing the same does not interfere with the structural integrity and/or maintenance of the privacy wall and/or patio home.

Easement for Adjacent Privacy Wall: An 8-foot easement is further reserved along the adjacent boundary line of each lot, opposite the boundary line along which the wall is to be constructed for the construction, maintenance, and repair of the patio wall, and/or patio home on the adjoining lot. The use of said easement area by an adjoining lot owner shall not exceed a reasonable period of time during construction nor shall it exceed a period of fifteen (15) days each year for essential maintenance. Shrubbery or planting in the 8-foot easement that is removed or damaged by the adjoining lot owner during the construction, maintenance, or repair of his patio wall and/or patio home, shall be repaired or replaced at the expense of the said adjoining lot owner causing such damages.

Windows, Walls and/or Fences: Privacy walls shall not be required with side or courtyard entry garages. The construction of a privacy wall will be at the discretion of the owner with approval by the appropriate ARB. Portions extending beyond the building must be faced on both sides with material matching facings of the dwelling unit. Height of wall must be maintained at seven (7) feet above grade. No door openings are allowed within the privacy wall and no access shall be provided through a privacy wall from one homesite to another. Glass block and obscure, fixed windows in the privacy wall or on the privacy wall side of the house will be permitted with approval of the ARB. Transom windows on the privacy side must be a minimum of 6 feet above floor level. Home design should allow egress out of the front and back of the home where required by Code.

For walls and fences see Section 3.9 and 3.1.4. In addition, walls and or fences on the front of the property must be compatible with the home design. Walls and /or fences extending to a privacy wall must have gate access in the 3 foot easement area.

5.1.5 Exceptions for "Privacy Walls": Considered Patio Family Homes, Hackberry Lane and Hunter's Run do not require privacy walls.

5.2 Cottage Homesites - Boxwood Road:

5.2.1 Lot Coverage: First floor enclosed area of a Cottage Home may not be constructed so as to cover or occupy, including garages, carports, screened and/or roof covered porches, more than 45% of the entire area of the cottage lot. Maximum total coverage to include decks, patios, walkways, driveways, pools and other improvements is not to exceed 50% of the total lot area.

5.2.2 Minimum Sq. Ft.: Minimum area shall be 1050 sq. ft. of heated and/or cooled space measured outside to outside of exterior walls. The ARB reserves the right to require that certain homesites be developed to attain alternate height buildings to assure a pleasing streetscape.

5.2.3 Minimum Setbacks: Setback requirements apply to all architectural elements integrated within the enclosed habitable space of a cottage home which

is covered by roof. In addition, decks, excluding those facing golf course or lake, may be permitted within the lot setbacks subject to approval by the ARB.

- Front yard adjoining street with garage opening toward street 15 ft.

- Front yard adjoining street with garage opening to side lot line 5 ft.
- Side yard adjoining street 15 ft.
- Side yard (no overhang encroachments) 7.5 ft.
- Rear yard adjoining open or wooded area 10 ft.
- Service yard 2 ft.

*** The Cottages are grandfathered with a minimum of 15' between homes.**

5.3 Magnolia Lake Estate Section: Magnolia Lake Court, Magnolia Lake Lane and Magnolia Lake Road:

5.3.1 Lot Coverage: First floor enclosed area of an estate home may not be constructed so as to cover or occupy, including garages, carports, screened and/or roof covered porches, more than 35% of the entire area of the lot. Maximum total coverage to include decks, patios, walkways, driveways, pools and other improvements is not to exceed 50% of the total lot area.

5.3.2 Minimum Sq. Ft.: The minimum area of heated and/or cooled space, measured outside to outside exterior walls shall be 3500 sq. ft.

5.3.3 Minimum Setbacks: The following are minimum setbacks, unless shown differently on applicable recorded plats:

	Lake Lots	Wooded/Golf
• Front (or side yard adjoining street unless designated differently on recorded plat)	35 ft.	35 ft.
• Side (or rear) yard adjoining golf course	30 ft.	30 ft.
• Side (or rear) yard adjoining another yard	17.5 ft.	20 ft.
• Side (or rear) yard adjoining lake	30 ft.	30 ft.
• Property line to side edge of driveway (1-foot minimum at turn around areas by garages)	3 ft.	5 ft.
• Service yards	10 ft.	10 ft.

5.4 Charles Towne Place:

5.4.1 Lot Coverage: First floor enclosed area of a home may not be constructed so as to cover or occupy, including garages, carports, screened and/or roof covered porches, more than 45% of the entire area of the lot. Maximum total coverage to include decks, patios, walkways, driveways, pools and other improvements is not to exceed 50% of the total lot area.

5.4.2 Minimum Sq. Ft.: Minimum area shall be 2200 sq. ft. of heated and/or cooled space measured outside of exterior walls. The first floor must be a minimum of 1100 sq. ft.

5.4.3 Minimum Setbacks: The following setbacks shall govern all development and setting of single family residences and are to be considered minimums, unless shown differently on applicable recorded plats. Setbacks are subject to approval by the City of Aiken as necessary to meet public safety requirements for building separation.

- Front (or side yard) 10 ft.
- Side (or rear) yard adjoining golf course `` 20 ft.
- Side yard adjoining another yard 10 ft.
- Rear yard adjoining another yard 20 ft.
- Property line to edge of driveway 1 ft.
- Service yards 1 ft.

5.4.4 Additional Requirements: Each home may have its own distinct character and architectural expression, but must be in a style of early or late Georgian, French Provincial, Federal, Greek Revival, Italianate, or an acceptable modification thereof. Two story structures are encouraged in order to be more compatible with the above architectural style. Single story homes, if demonstrated to be compatible, may be approved by the POA-ARB.

If the design of the house permits, front loading garage entrances should not extend beyond the front façade of the house and a setback behind the façade is encouraged. Side loading garages are permitted if this requirement cannot be met, but require POA- ARB approval.

A variety of form and style in one of the architectural styles described above is encouraged. External finish materials of primarily brick or stucco may be used and should be selected for their appropriateness to the natural surroundings. In addition, it is important that each home respect the size, height and general massing of the neighborhood residences in order that no one structure dominates the adjacent structures, nor seems out of character with its neighboring structures. A modest use of decorative ironwork is acceptable and desirable.

5.4.5 Privacy Wall Construction: Each home in Charles Towne Place will install a 5 foot to 7 foot high decorative wall on the left side (viewed from the street) of the home at the lot line. The wall may extend the length of the house, but no more than 5' beyond the façade or the rear house wall. Minimum length of this wall must be at least 50% of the house length on the left side. As an alternate to the side wall, the owner may apply to the POA-ARB for approval to install a walled-in patio in the front of the house. The patio wall must extend a minimum of a quarter of the length of the house in depth and be 5 feet to 7 feet in height. The wall is to be located on their property at the property line and may extend to the front setback line of the property. In order to enhance the appearance of the patio, all patio walls must be a combination of either stucco or brick and wrought iron or

similar construction which will not obscure the view and may also be erected across the front of the property as ingress and egress may allow. Approval of the POA-ARB for these structures is also
required. A combination of both the side wall and a front patio is acceptable if approved by the POA-ARB.

* On Lot #711 at the entrance, a wall must also be installed on the right side of the house on this lot.
* On Lot 726(combined lot with 725) privacy wall is not required since lot will not adjoin another property.

5.5 Eagles Nest - Eagles Nest Lane & Willow Oak Loop:

5.5.1 Lot Coverage: First floor enclosed area of a patio home may not be constructed so as to cover or occupy, including garages, carports, screened and/or roof covered porches, more than 45% of the entire area of the patio lot. Maximum total coverage to include decks, patios, walkways, driveways, pools and other improvements is not to exceed 50% of the total lot area.

5.5.2 Minimum Sq. Ft: Minimum area shall be 1300 sq. ft. of heated and/or cooled space measured outside to outside of exterior walls.

5.5.3 Minimum Setbacks:

• Front yard adjoining street with garage opening toward street	10 ft.
• Front yard adjoining street with garage opening toward side of lot	5 ft.
• Side yard adjoining street	15 ft.
• Side yard	10 ft.
• Rear yard.	15 ft.
• Service yards	5 ft.

5.5.4 Additional Requirements:

- Houses are to be brick or stucco or a combination of both. Vinyl siding is acceptable for gable areas and dormers only.
- Soffits and fascia are to be covered in aluminum or vinyl.
- Stucco colors must be neutral.
- Fireplaces must be natural gas (no wood burning).
- Carports are not permitted. All homes must have a two-car garage.

5.6 Longwood Green Court & Short Iron Drive:

5.6.1 Lot Coverage: Enclosed area of the dwelling unit at first floor level including garages, carports, screened and/or roof covered porches, decks and any other structures raised off ground level shall not exceed 35% of the area of the homesite. Maximum total coverage to include walks, driveways and other improvements at

ground level is 50%.

5.6.2 **Minimum Sq. Ft.:** 2750 sq. ft.

5.6.3 **Minimum Setbacks**: The neighborhood has suggested minimum setbacks. Suggested setbacks are preferred to enhance the stately appearance of the neighborhood. Due to the angles of the homesites some homes will require more generous setback requirements.

	Suggested	Minimum
• Front*	30 ft.	30 ft.
• Side	20 ft.	15 ft.
• Back	30 ft.	20 ft.
• Side (corner homesite) *	25 ft.	25 ft.

* Setbacks in this area are measured from back of curb. Recommended that garages be side loaded where homesite allows.

5.7 Club Villas - Club Villa Drive West & Club Villa Drive East:

5.7.1 **Lot Coverage**: The homeowner owns only the area of the footprint of the dwelling. All other area is considered common property of the Club Villas Association.

5.7.2 **Minimum Sq. Ft.**: As built by the Development Company.

5.7.3 **Minimum Setbacks:** As established by the Development Company.

5.7.4 **Club Villa Association and Requirements:** Specifics are held in the Association Bylaws available at the WPPOA office.

Home improvements must first be approved by the Club Villa Association before submission to the POA-ARB for final approval.

5.8 Cottonwood Creek – Cottonwood Creek Lane & Popular Hill Court:

5.8.1 **Lot Coverage**: The homeowner owns only the area of the footprint of the dwelling. All other area is considered common property of the Cottonwood Creek Association.

5.8.2 **Minimum Sq. Ft.**: As built by the Development Company.

5.8.3 **Minimum Setbacks:** As established by the Development Company.
5.8.4 **Cottonwood Creek Association and Requirements**: Specifics are held in

the Association Bylaws available at the WPPOA office.

Home improvements must first be approved by the Cottonwood Creek Association before submission to the POA-ARB for final approval.

5.9 The Fairways - Double Eagle Court:

5.9.1 Lot Coverage: Enclosed area of the dwelling unit at first floor level including garages, carports, screened and/or roof covered porches, decks and any other structures raised off ground level shall not exceed 35% of the area of the homesite. Maximum total coverage to include walks, driveways and other improvements at ground level is 50%.

5.9.2 Minimum Sq. Ft.: 1800 heated sq. ft.

5.9.3 Minimum Setbacks:

- Front 15 ft.
- Rear 20 ft.
- Sides 10 ft

5.9.4 Fairways Association and Requirements: **T**he Fairways neighborhood is intended to be a single-street enclave of all-brick homes that are harmonious and complementary in design and materials. On June 27, 2007, the POA ARB took responsibility for upholding the following material and other guidelines specific to the Fairways:

- As of March 28, 2005, fences are not permitted.
- Brick - Oversized Boral "Windemere"
- Shingles - GAF "Weathered Wood"
- Windows and doors – Anderson
- Each home will have a decorative exterior soldier brick "belly band" at the first floor level.
- All windows must have shutters or stucco trim or a combination of both.
- Porches should have aluminum screening.

5.10 Forest Pines – Forest Pines Road:

5.10.1 Lot Coverage: First floor enclosed area of a single-family home, including garages, carports, screened and/or roof covered porches, may not be constructed so as to cover or occupy more than 35% of the entire area of the lot. Maximum total coverage to include decks, patios, walkways, driveways, pools and other improvements is not to exceed 50% of the total lot area.

5.10.2 Minimum Sq. Ft.: 1750 heated sq. ft

5.10.3 Minimum Setbacks:

- Front 25 ft.
- Rear 15 ft. Wooded lot
  25 ft. Golf lot
- Side 10 ft.

5.11 Fox Trace Court & Huntington Court:

5.11.1 Lot Coverage: First floor enclosed area of a Patio Home, including garages, carports, screened and/or roof covered porches, may not be constructed so as to cover or occupy more than 45% of the entire area of the Patio lot. Maximum total coverage to include decks, patios, walkways, driveways, pools and other improvements are not to exceed 70% of the total lot area.

5.11.2 Minimum Sq. Ft.: 1200 heated sq. ft.

5.11.3 Minimum Setbacks:

- Front 10 ft. garage opening toward street
  0 ft. garage opening side or courtyard
- Side While the plat shows 7½ ft. side setback, 10 ft. or more is required to satisfy the City of Aiken requirement for a 20-ft. separation between 2-story dwellings or a single-story dwelling adjoining a 2-story dwelling
- Rear 20 ft. golf course lot
  15 ft. wooded/interior lot

5.12 Spalding Lake Circle:

5.12.1 Lot Coverage: First floor enclosed area of a home, including garages, carports, screened and/or roof covered porches, may not be constructed so as to cover or occupy more than 35% of the entire area of the lot. Maximum total coverage to include decks, patios, walkways, driveways, pools and other improvements is not to exceed 50% of the total lot area.

5.12.2 Minimum sq. ft.: 1750 heated sq. ft.

5.12.3 Minimum Setbacks:

- Front 25 ft.
- Side 10 ft.
- Rear 25 ft. golf course lot
  15 ft. wooded lot

5.13 Holley Ridge Road:

5.13.1 Lot Coverage: First floor enclosed area of a single family home, including garages, carports, screened and/or roof covered porches, may not be constructed so as to cover or occupy more than 35% of the entire area of the lot. Maximum total coverage to include decks, patios, walkways, driveways, pools and other improvements is not to exceed 50% of the total lot area.

5.13.2 Minimum Sq. Ft.: 1750 heated sq.

5.13.3 Minimum Setbacks:

Golf Course Property:

- Front yard adjoining street 25 ft.
- Rear yard adjoining golf course 40 ft.*

*Lots 490, 491, 473 and 510 require a minimum of 35 ft. off the golf course

Wooded Property:

- Front yard adjoining street 25 ft.
- Rear yard adjoining buffered right of way 15 ft.
- All side yards 10 ft.

* Lot 509 requires a 5-ft. minimum setback off the buffered right of way

* Front setbacks adjoining street are measured from property line

5.14 Forest Ridge – Forest Ridge Drive:

5.14.1 Lot Coverage: Enclosed area of the dwelling unit at first floor level including garages, carports, screened and/or roof covered porches, decks and any other structures raised off ground level shall not exceed 45% of the area of the homesite. Maximum total coverage to include walks, driveways and other improvements at ground level is 50%.

5.14.2 Minimum Sq. Ft.: 1750 sq. ft.

5.14.3 Minimum Setbacks:

	Golf Course	Interior Lot
• Front	15 ft.	15 ft.
• Rear	20 ft.	20 ft.
• Side	10 ft.	10 ft.
• Property line to edge of driveway (Patio lots)	1 ft.	1 ft.

5.14.4 Additional Requirements: No vinyl siding will be permitted on the rear of homes backing onto the golf course except for gables and dormers.

It is the strong desire of the developer that the golf lot homeowner sod as much area up to the golf course as possible to enhance property value.

5.15 Forest Bluffs – Forest Bluffs Road:

5.15.1 Lot Coverage: Enclosed area of the dwelling unit at first floor level including garages, carports, screened and/or roof covered porches, decks and any other structures raised off ground level shall not exceed 35% of the area of the homesite. Maximum total coverage to include walks, driveways and other improvements at ground level is 50%.

5.15.2 Minimum Sq. Ft.: 2000 heated sq. ft.

5.15.3 Minimum Setbacks:

	Golf Course	Interior Lots
• Front	25 ft.	30 ft.
• Rear	25 ft.	30 ft.
• Sides	10 ft.	10 ft.

5.15.4 Additional Requirements: Vinyl siding is not permitted, except for gables and dormers, fascia and soffit.

5.16 Glen Haven – Glen Haven Circle:

5.16.1 Lot Coverage: First floor enclosed area of a Patio Home, including garages, carports, screened and/or roof covered porches, may not be constructed so as to cover or occupy more than 45% of the entire area of the Patio lot. Maximum total coverage to include decks, patios, walkways, driveways, pools and other improvements is not to exceed 50% of the total lot area.

5.16.2 Minimum Sq. Ft.: 1,200 heated sq. ft.

5.16.3 Minimum Setbacks:

•	Front	25 ft.
	Rear	15 ft.
	Side	10 ft.
• Lots 615-627	Front	15 ft.
	Rear	15 ft.
	Side	10 ft.

*Lots 615-617 have a setback of 10’ in the rear because of utility lines

• Lots 628 - 632	Front	35 ft.
	Rear	15 ft.
	Sides	10 ft

5.16.4 Additional Requirements: It is the intent of the Development Company to establish Glen Haven as a 55 or older Adult Community with a limited selection of home styles with a common look and feel.

All homes are required to use Boral “Briarwood Blend” as brick selection or equivalent.

5.17 Oakman's Bluff- Birch Tree Circle, Holley Ridge Road, River Birch Road & White Birch Court:

5.17.1 Lot Coverage: First floor enclosed area of a single family home, including garages, carports, screened and/or roof covered porches, may not be constructed so as to cover or occupy more than 35% of the entire area of the lot. Maximum total coverage to include decks, patios, walkways, driveways, pools and other improvements is not to exceed 50% of the total lot area.

5.17.2 Minimum Sq. Ft.: 2200 heated sq. ft.*
* Exceptions are homesites 640, 641, 642, 643, 644, 645, 646, 647, 648, 649, 650 and 651. The minimum sq. ft. for these homesites is 1800 sq. ft.

5.17.3 Minimum Setbacks:

	Golf Course	Lake Front	Interior
• Front*	30 ft.	25 ft.	30 ft.
• Rear	25 ft.	25 ft.	30 ft.
• Sides	10 ft.	10 ft.	10 ft.

* Exceptions are lots 668 & 675 where the front setback is 20 ft. minimum

5.17.4 Additional Requirements: Vinyl siding is not permitted, except for gables and dormers, fascia and soffit.

On golf course lots, the side facing the golf course, sod and/or landscape treatment must extend to the golf course line. The POA-ARB, at its sole discretion, may allow deviations from these requirements if the lot size and natural growth make this appropriate.

5.18 The Overlook – Spaulding Bridge Road, Bridle Lane, Foxhound Run (Lots 2-21, 22A & 24-67) & Steeplechase Road (Lots 1A-1 – 1A-9, 1 & 73-77):

5.18.1 Lot Coverage: Enclosed area of the dwelling unit at first floor level including garages, carports, screened and/or roof covered porches, decks and any other structures raised off ground level shall not exceed 35% of the area of the homesite.

Maximum total coverage to include walks, driveways and other improvements at ground level is 50% of the total lot area.

5.18.2 Minimum Sq. Ft.: 1750 heated sq. ft.

5.18.3 Minimum Setbacks:

- Front 25 ft.

- Rear 25 ft.
- Sides 10 ft.

5.18.4 Additional Requirements: Vinyl siding is not permitted, except for gables and dormers, fascia and soffit.
On golf course lots, the side facing the golf course, sod and/or landscape treatment must extend to the golf course line. The appropriate ARB, at its sole discretion, may allow deviations from these requirements if the lot size and natural growth make this appropriate.

5.19 Belmont Bluffs - East Pleasant Colony Drive, Storm Song Court, Summer Squall Lane, Trippi Lane & Woodside Plantation Drive (Lots 86 - 92 & 123):

5.19.1 Lot Coverage: First floor enclosed area of a single family home, including garages, carports, screened and/or roof covered porches, may not be constructed so as to cover or occupy more than 35% of the entire area of the lot. Maximum total coverage to include decks, patios, walkways, driveways, pools and other improvements is not to exceed 50% of the total lot area.

5.19.2 Minimum Sq. Ft.: 1800 heated sq. ft.*

* Exceptions are homesites on lots 94, 95, 96, 97, 98, 99, 100 and 101. The minimum for these homesites will be 2200 heated sq. ft.

5.19.3 Minimum Setbacks:

	Golf Course	Interior Lots
• Front	25 ft.	25 ft.
• Rear*	25 ft.	25 ft.
• Sides	10 ft.	10 ft.

* Exceptions are lots 152 through 162 where the rear setback is 20% of the lot depth, 50 ft. maximum. Review final plat for easement information.

5.19.4 Additional Requirements: Vinyl siding is not permitted, except for gables and dormers, fascia and soffit.
On golf course lots, the side facing the golf course, sod and/or landscape treatment must extend to the golf course line. The appropriate ARB, at its sole discretion, may allow deviations from these requirements if the lot size and natural growth make this appropriate.

5.20 Cedar Ridge - Red Cedar Road, Tulip Popular Court & White Cedar Way:

5.20.1 Lot Coverage: Enclosed area of the dwelling unit at first floor level including garages, carports, screened and/or roof covered porches, decks and any other structures raised off ground level shall not exceed 45% of the area of the homesite. Maximum total coverage to include walks, driveways and other improvements at ground level is 50%.

5.20.2 Minimum Sq. Ft.: 1800 heated sq. ft.

5.20.3 Minimum Setbacks:

	Golf Course	Interior Lots
• Front	25 ft.	25 ft.
• Rear*	30 ft.	25 ft.
• Sides	10 ft.	10 ft.

*Rear yard setbacks indicated are more restricted than the final plat. Building Guidelines take precedence over the final plat.

5.20.4 Additional Requirements: Vinyl siding is not permitted, except for gables and dormers, fascia and soffit.

*On golf course lots, the side facing the golf course, sod and/or landscape treatment must extend to the golf course line. The POA-ARB, at its sole discretion, may allow deviations from these requirements if the lot size and natural growth make this appropriate.

5.21 West Pleasant Colony – West Pleasant Colony Drive & Periwinkle Court, Steeplechase Road (Lots 262, 263 & 269):

5.21.1 Lot Coverage: First floor enclosed area of a single family home, including garages, carports, screened and/or roof covered porches, may not be constructed so as to cover or occupy more than 35% of the entire area of the lot. Maximum total coverage to include decks, patios, walkways, driveways, pools and other improvements is not to exceed 50% of the total lot area.

5.21.2 Minimum Sq. Ft.: 2200 heated sq. ft.

5.21.3 Minimum Setbacks:

	Golf Course	Interior Lots
• Front	30 ft.	30 ft.
• Rear*	30 ft.	30 ft.
• Sides	10 ft.	10 ft.

* Rear yard setbacks indicated are more restricted than the final plat. The Building Guidelines take precedence over the final plat.

5.21.4 Additional Requirements: Vinyl siding is not permitted, except for gables and dormers, fascia and soffit.
On golf course lots, the side facing the golf course, sod and/or landscape treatment must extend to the golf course line. The appropriate ARB, at its sole discretion, may allow deviations from these requirements if the lot size and natural growth make this appropriate.

5.21.5 Additional Landscape Requirement: Woodside Development Company planted West Pleasant Colony with 300 Live Oak trees to create a consistent and attractive streetscape. The POA and the Development Company ARB are jointly approving the following additional landscape guidelines for West Pleasant Colony Drive effective 3/16/2015.

As with all lots in Woodside Plantation where there is no common property buffer, the property owner is responsible for landscape and its maintenance to the curb. While there is a 12 ½ ft. road right-of-way from the curb in which the live oak trees have been planted, the area including the live oak trees, remain the property owner's responsibility.

- Sod is required by the property owner to extend 19 to 20 feet back from the curb and, in general, no additional plantings are permitted in the 20-foot area except for low accent, and ornamental shrubs and plantings a property owner may wish to have.

The ARBs will pay careful attention to providing approval for landscape elements in the 20-foot area that will enhance and not detract from the overall intended look. Street trees are intended to frame and complement homes rather than screen them. Streets trees are generally taller than 40 feet at maturity, have large visible trunks, and branch systems that homeowners can walk under.

- Any replacement of a live oak tree in the 20-foot area is the responsibility of the property owner.

- Regardless of diameter, all Live Oak trees on West Peasant Colony Drive require authorization from the POA-ARB for removal. Replacement trees must be planted within six (6) months or receiving approval to remove the tree(s).

- To maintain the desired and consistent streetscape of West Pleasant Colony Drive, for each two Live Oak trees removed from a homeowner's property, they must be replaced within 6 months by at least one Live Oak or one designated specimen tree below:

Red Maple *(Acer Ruburm)*

American Elm *(Valley Forge, New Harmony)*

Oak *(Laurel, Pin, Live, or Willow)*

Sycamore/ Plane tree *(Platanus occidentalis or Plantanus x acerifolia)*

Crepe Myrtle *(Natchez, Tuskegee, Muskogee)*

Yoshino Cherry *(P. x yedoensis)*

While approval for removal is required, replacement is not required by the POA-ARB when not practical due to utility interference, remediation of driveway, sidewalk, or hardscape damage, or aesthetic considerations

- Replacement trees of any type should be placed in a 7-to 9-foot diameter, mulch-covered planting circle that is between 8 and 20 feet from the curb.

- Replacement trees should be near the location of removed trees unless they will cause utility interference or long-term damage to driveways, sidewalks, or other hardscape.

- The property owner's sprinkler system must cover to the curb.

5.22 Bellewood – Bellewood Drive:

5.22.1 Lot Coverage: First floor enclosed area of a single-family home, including garages, carports, screened and/or roof covered porches, may not be constructed so as to cover or occupy more than 35% of the entire area of the lot. Maximum total coverage to include decks, patios, walkways, driveways, pools and other improvements is not to exceed 50% of the total lot area.

5.22.2 Minimum Sq. Ft: 1800 heated sq. ft.

5.22.3 Minimum Setbacks:

	Golf Course	Interior Lots
• Front*	25 ft.	25 ft.
• Rear*	20 ft.	20 ft.
• Sides	10 ft.	10 ft.

* Front and rear yard setbacks indicated are more restricted than the final plat. The Building Guidelines take precedence over the final plat.

*Note - B1-U1 – B5-U15 are triplex units.

5.22.4 Additional Requirements: Vinyl siding is not permitted, except for gables and dormers, fascia and soffit.

On golf course lots, the side facing the golf course, sod and/or landscape treatment must extend to the golf course line in keeping with the look and feel of the golf course landscape. The POA- ARB, at its sole discretion, may allow deviations from these requirements if the lot size and natural growth make this appropriate.

Decks in excess of 5 feet in height above grade are prohibited from having the area below the deck screened with lattice without adequate landscaping and special POA-ARB approval. It is suggested that brick or decorative columns be used under the deck in these situations.

5.23 The Enclave – Enclave Drive & Highland Reserve Court: (Revised 07/01/2024)

5.23.1 Lot Coverage: First floor enclosed area of a home may not be constructed so as to occupy, including garages, screened and/or roof covered porches, more than 40% of the entire area of the lot. Maximum total coverage to include decks, patios, walkways, driveways, pools and other improvements shall not exceed 55% of the total lot area.

5.23.2 Minimum Sq. Ft.: The minimum area of heated and/or cooled space, measured outside exterior walls shall be 2,400 square feet.

5.23.3 Minimum Setbacks: The following are the minimum setbacks, unless shown differently in applicable plats:

• Front	20 ft.
• Side (or rear) yard adjoining golf course	25 ft.
• Side	10 ft.
• Rear	25 ft.
• Property line to edge of driveway	3 ft.

5.23.4 Additional Requirements:

- **Home Design Philosophy:** Homes in **The Enclave** in the Reserve at Woodside Plantation are expected to evidence an elegant and refined look, with a goal of emphasizing outdoor living in the rear of the homes. The unique location of **The Enclave**, directly adjacent to Holes Nos. 1 and No. 18 of The Reserve Course and visible from the Reserve Clubhouse, creates an ideal setting, but one that must blend with and compliment, the Reserve Course and Clubhouse. In order to create a consistent architectural look throughout the area, there will be substantial requirements placed upon Owners in the construction process, including design; materials utilized in construction; landscaping; and, decorative features.

Property owners must realize that substantial authority will be vested with the Enclave Neighborhood Association through its Board of Directors (hereinafter "Association") in addition to the Woodside Plantation POA's ARB (hereinafter "ARB") in determining the suitability of the designs submitted for construction in **The Enclave**. These

requirements will necessarily increase the cost of construction, but are necessary to create a neighborhood of unique character and beauty. (The following are the home design philosophies sought to be achieved in the Enclave :)

- **Rear Patios & Courtyards:** The integration of a rear patio and courtyards with covered patios at the rear portion of the home is a sought-after design feature of The Enclave. All owners are encouraged to design and incorporate such features into their home and lot plan.

- **Garage Orientation:** Although not strictly required, most homes will be front loaded garages, especially for lots adjacent to the Reserve Course. Exceptions will be

permitted, however, in order to create some variation in streetscape and on lots which necessitate side load/or courtyard entry.

- **Roof:** The lines of roofs should create interest and variability. Gables, dormers and other architectural features to break up roof expanse are encouraged. Substantial spans of blank roofing should be avoided, especially in the front elevation.

- **Decorative Features:** Use of ornamental iron (painted black or dark brown) is encouraged, whether in decorative façade treatments on the home; to construct a courtyard with brick; and, where permitted by the Board and POA, as a fencing material. Elevations, especially the front of each home, should present interest and architectural features where possible to create an elegant, architecturally interesting appearance.

Building Requirements: When house plans are submitted for approval, the Board asks that detailed selection samples accompany these plans for review. There will be the following requirements for Homes constructed in The Enclave:

- **Height:** Minimum plate heights of 10 feet are required.

- **Exterior Brick:** All homes will be constructed of brick. The Association has the exclusive right to determine the style, shape, and color of the brick including mortar joints chosen by the homeowner. Brick for use on all homes is General Shale (Mfr.) Spanish Moss Blend. Queen size brick is required. Mortar: Standard Grey or Ivory Buff/White Sand.

- **Exterior Accents:** Natural stone, stucco and brick accents in color schemes acceptable to the Enclave Association will be allowed to the home's exterior. No white or dark brown stucco may be used. (Natural stone may be used as an accent or a feature but shall be limited to the Boral Cultured Stone collection with sizes and shapes limited to "Square Cut", "Over 8" and "Under 8". Stucco and brick accent color schemes must be approved by the Association.) Vinyl siding, shaker shingles and cement board or other similar materials are not permitted to be used as accents. Vinyl and other similar materials may be used in soffit, fascia, overhang, certain exterior ceiling locations and other locations

which are not readily noticeable. The Association shall have the right to veto any plan not in conformity with these guidelines.

Stucco colors are limited to the following Dryvit (Mfr.) colors:

108 – Manor
White # 110 - Van
Dyke
111 – Prairie
Clay # 442 –
Cotton

Soffit and facia color options are restricted to the following Variform selections:

Almond
Autumn
Beige Sandy
Tan
Stone Mountain Clay

- **Roofing:** A minimum 40 years, architectural grade shingle shall be required and the Association shall have the right to veto any color of roofing shingle deemed unacceptable. Roofing is limited to CertainTeed Landmark: Weathered Wood or Driftwood.

- **Windows:** All front windows, patio doors, and/or sliders must be upgraded, high quality window/or door. (All front windows shall have grids as shall all windows in garages; although grids may be required in only the upper sash of those windows.) It is strongly suggested that all windows have grids as an architectural feature desired in all homes in The Enclave. Pella SDL windows and slider/patio doors are required to be used in homes (unless exception is approved in writing). Pella window color options are Poplar White, Tan or Putty with 7/8" grids required in front windows (at least upper sash.) If using a different window manufacturer, such windows should match closely to the required Pella window colors.

- **Garage Doors:** (Garages must have at least two (2) bays and may be approved by the Association and/or the POA for three (3) bays.) Most shall have single doors and be 9 feet wide but, occasionally, an 18 foot wide, double garage door may be approved due to streetscape considerations, limited visibility of the garage door, or for purely aesthetic reasons. (The garage door(s) must be of a style and color which complements the rest of the home's exterior and the Association has the right to veto any plan not in conformance with these guidelines.) AMAAR Series 2000 Oak Summit or Classica Collection garage doors are obligatory.

- **Driveways:** All driveways (and front walkways) shall be constructed utilizing pavers of a color and style (that complements the rest of the home's exterior and the Association has the right to veto any plan not in conformance with these guidelines.) Pavers to be utilized are Pavestone (Mfr.) Heritage Buff.

- **Decks & Patios:** No elevated or wooden decks are permitted. Patios may be constructed of concrete, pavers, brick or stone and courtyard treatments are encouraged.

- **Screening Enclosures:** All HVAC units and generators located on the outside of the home must be sitting on a concrete slab not less than 6 foot by 8 foot and enclosed by a decorative brick wall so as to be hidden from view by neighbors. If the walk-in to such enclosure faces the Reserve Golf Course and/or Clubhouse, plants must be used to obscure the view therefrom. Testing of generators should not be performed before 10:00 AM.

- **Exterior Lighting:** All exterior lighting fixtures shall be black, dark brown or antique brass. Exterior, low voltage landscape lighting systems are strongly encouraged to set off landscaping and create an elegant night time ambiance.

- **Vehicle Charging Stations:** The installation of a vehicle charging station is permitted on any lot provided it is installed by a certified technician and meets all current applicable governmental standards.

- **Solar Panels:** Installation of any solar energy system on a lot will be reviewed by the Board on a case-by-case basis and requires majority approval by the Board prior to installation.

Landscaping: The Association provides landscaping services to homes with **The Enclave** through the landscaping company selected by the Association but the responsibility of selecting appropriate plantings and their initial installation is that of the homeowner through the landscaper they choose. That is equally true of the underground watering system installed which is strongly recommended to be joined to the community well system. In the event the homeowner desires to not use the community well system, the homeowner consent to sign and abide by the agreement provided by the Enclave HOA is required. Landscaping is critical to achieving and maintaining the natural beauty and ambiance of **The Enclave** neighborhood. The following requirements must be adhered to by all Owners within The Enclave:

- **Minimum Landscaping Allowance:** A minimum allowance of $25,000 per lot must be expended on landscaping. (Landscaping includes the cost of the underground irrigation system; sod: plants; trees; vines; pine straw or mulch; and, labor. It does not include patios; driveways; walkways; or other hardscape.)

- **Plant Material:** Natural indigenous plants and trees are strongly encouraged with all plants to be at least 3 gallons or larger in size.

- **Beds:** Large pine straw areas in excess of 100 square feet without plantings are not allowed but must be grassed.

- **Specific Requirements for Lots Adjacent to the Golf Course:** Lots adjacent to the Reserve Golf Course shall extend grassing to the golf course. The rear of lots adjacent to the Reserve Golf Course should seek to retain and/or supplement natural plant buffers to avoid wide open, unimpeded spans that view the golf course. A minimum of 4 specimen trees of reasonable caliper should be planted or retained upon clearing the lot to buffer the rear of each lot adjacent to facing the golf course along with additional ground plantings to create a natural transition between the lot and the golf course.

Landscape Plan Approval: The homeowner shall submit a detailed landscape plan, drawn to a scale of 1” = 10’, to the Association president at least 10 days prior to work being commenced detailing the name of the plants and trees to be used and their location. The Association has the right to veto any landscaping plan.

5.24 The Oaks – Golden Oak Drive:

5.24.1 Lot Coverage: Enclosed area of the dwelling unit at first floor level including garages, carports, screened and/or roof covered porches, decks and any other structures raised off ground level shall not exceed 45% of the area of the home site. Maximum total coverage to include walks, driveways and other improvements at ground level is 50%.

5.24.2 Minimum Sq. Ft.: 2,100 heated sq. ft.

5.24.3 Minimum Setbacks:

	Golf Course	Interior Lots
• Front	25 ft.	25 ft.
• Rear*	30 ft.	25 ft.
• Sides	10 ft.	10 ft.
• Property line to edge of driveway (1-foot min. at turnaround area by garage)	3 ft.	3 ft.

* 30 ft. rear setbacks are suggested on Golf Course lots; however, 25-foot setbacks will be allowed on an exception basis.

5.24.4 Additional Requirements: No vinyl siding will be permitted except for gables, dormers, fascia and soffits. Vinyl shake siding is permitted in gables, dormers and as accents.

Sod must be planted to the golf course line on all golf course lots. The appropriate ARB must approve all landscape plans. These regulations require landscape areas which are adjacent to the Reserve Club Golf Course be at a standard which complements and enhances the golf course.

The specific requirements with respect to landscaping areas abutting the Reserve Golf Course include:

- Sodding and landscaping areas within 20 feet of the golf course in general conformity with the overall landscaping pattern of the fairway area
- Installing shrubbery and trees in the rear of your home site to soften the view of your home from the golf course
- Managing drainage from the home site, both during and following construction of a home, in a manner to properly move drainage water in a reasonable manner, consistent with Woodside Plantation's Drainage Plan
- Avoiding unsightly conditions on the home site which may be visible from the golf course
- Working with the Reserve Club staff to avoid any issue which may adversely affect the Reserve Golf Course or its maintenance

5.25 The Pointe – Bridge Crest Court & Crescent Pointe:

5.25.1 Lot Coverage: Enclosed area of the dwelling unit at first floor level including garages, carports, screened and/or roof covered porches, decks and any other structures raised off ground level shall not exceed 35% of the area of the home site. Maximum total coverage to include walks, driveways and other improvements at ground level is 50% of the total lot area.

5.25.2 Minimum Sq. Ft.: 2,200 heated sq. ft.

5.25.3 Minimum Setbacks:

	Golf Course	Interior Lots
• Front	25 ft.	25 ft.
• Rear*	30 ft.	25 ft.
• Sides	10 ft.	10 ft.
• Property line to edge of driveway	3 ft.	3

ft. (1-foot min. at turnaround area by garage)

*30 ft. rear setbacks are suggested on Golf Course lots; however, 25-foot setbacks will be allowed on an exception basis.

5.25.4 Additional Requirements:
No vinyl siding will be permitted except for gables, dormers, fascia and soffits. Vinyl shake siding is permitted in gables, dormers and as accents.

Sod must be planted to the golf course line on all golf course lots. The appropriate ARB must approve all landscape plans. These regulations require landscape areas which are adjacent to the Reserve Club Golf Course be at a standard which complements and enhances the Golf Course.

The specific requirements with respect to landscaping areas abutting the Reserve Golf Course include:

- Sodding and landscaping areas within 20 feet of the golf course in general conformity with the overall landscaping pattern of the fairway area.
- Installing shrubbery and trees in the rear of your home site to soften the view of your home from the golf course.
- Managing drainage from the home site, both during and following construction of a home, in a manner to properly move drainage water in a reasonable manner, consistent with Woodside Plantation's Drainage Plan.
- Avoiding unsightly conditions on the home site which may be visible from the golf course.
- Working with the Reserve Club staff to avoid any issue which may adversely affect the Reserve Golf Course or its maintenance.

5.26 Grand Haven – Pink Dogwood Circle:

5.26.1 Lot Coverage: First floor enclosed area of a Patio Home, including garages, carports, screened and/or roof covered porches, may not be constructed so as to cover or occupy more than 45% of the entire area of the Patio lot. Maximum total coverage to include decks, patios, walkways, driveways, pools and other improvements is not to exceed 50% of the total lot area.

5.26.2 Minimum Sq. Ft.: 1,650 heated sq. ft.

5.26.3 Minimum Setbacks:

- Front: 10 ft. Courtyard Garage Entry
  20 ft. Front Garage Entry Home
- Rear: 20 ft

  Sides 10 ft

- Property line to edge of driveway (1-foot min. at turnaround area by garage) 3 ft.

5.26.4 Additional Requirements:

Homes to be constructed in Grand Haven are limited to the floor plans and elevations offered in the "Grand Haven Collection" and built by Carolina Signature Homes. Deviation from the designs of the front elevations in the "Grand Haven Collection" is not permitted. The "Cypress III" is included in the collection as an update to "The Laurens". On elevations where a shake product is shown, vinyl shakes are allowed. Horizontal/vertical vinyl siding will not be permitted.

These Building and Landscape Guidelines require enhanced landscaping of all areas of home sites that are adjacent to West Pleasant Colony Drive or White Dogwood. The landscaping must be at a standard which complements and enhances these roads and the existing and/or proposed landscaping of these rights of ways.

The specific requirements with respect to landscaping areas of home sites abutting West Pleasant Colony Drive and White Dogwood include:

- Sod is required by the property owner to extend 20 feet back from the curb and, in general, no additional plantings are permitted in the 20 ft. area except for low accent, and ornamental shrubs.
- Installing shrubbery and trees adjacent to the right-of-way's to soften and buffer the view of the home from the roadway.

5.27 Steeplechase Reserve – Steeplechase Road (Lots 101-121):

5.27.1 Lot Coverage: Enclosed area of the dwelling unit at first floor level including garages, carports, screened and/or roof covered porches, decks and any other

structures raised off ground level shall not exceed 45% of the area of the home site. Maximum total coverage to include walks, driveways and other improvements at ground level is 50%.

5.27.2 Minimum Sq. Ft.: 2,100 heated sq. ft.

5.27.3 Minimum Setbacks:

	Golf Course	Non-Golf Course
• Front*	20 ft.	20 ft.
• Rear	25 ft.	25 ft
• Sides	10 ft.	10 ft.

- Driveway minimum setback is 3 feet from the property line.

  (1-foot min. at turnaround area by garage)

* Lots 101 & 102 have a 10-foot front setback.

5.27.4 Additional Requirements: Vinyl siding is not permitted except for gables, dormers, fascia and soffits. Vinyl shake siding is permitted in gables, dormers and as accents.

Sod must be planted to the golf course line on the side of golf course lots that faces the golf course. The POA-ARB must approve all landscape plans. These regulations require landscape areas which are adjacent to the golf course be at a standard which complements and enhances the golf course.

The specific requirements with respect to landscaping areas of the home site abutting the Reserve Course include:

- Sodding and landscaping areas within 20 feet of the Course in general conformity with the overall landscaping pattern of the fairway area
- Installing shrubbery and trees in the rear of the home site to soften the view of your home from the Course.
- Managing drainage from or onto your home site, both during and following construction of a home, in a manner to properly move drainage water in a reasonable manner, consistent with Woodside Plantation's Drainage Plan
- Avoiding unsightly conditions on your home site which may be visible from the Course
- Working with the Reserve Club staff to avoid any issue which may adversely affect the Reserve Course or its maintenance.

5.28 Ridge Oak Heights – Quiet Oak Court:

5.28.1 Lot Coverage: Enclosed area of the dwelling unit at first floor level including garages, carports, screened and/or roof covered porches, decks and any other structures raised off ground level shall not exceed 45% of the area of the home site. Maximum total coverage to include walks, driveways and other improvements at ground level is 50%.

5.28.2 Minimum Sq. Ft.: 2,100 heated sq. ft.

5.28.3 Minimum Setbacks:

	Golf Course	Non-Golf Course
• Front*	20 ft.	20 ft.
• Rear	25 ft.	25 ft.
• Sides	10 ft.	10 ft.

*Driveway minimum setback is 3 feet from the property line
(1 foot min. at turnaround area by garage)

***** Lots 215, 216, 217, 218, 219, 220, 221, 222 will have a 10 ft. front setback.

5.28.4 Additional Requirements: Vinyl siding is not permitted except for gables, dormers, fascia and soffits. Vinyl shake siding is permitted in gables, dormers and as accents.
Sod must be planted to the golf course line on the side of golf course lots that faces the golf course. The appropriate ARB must approve all landscape plans. These regulations require landscape areas which are adjacent to the golf course be at a standard which complements and enhances the golf course.

The specific requirements with respect to landscaping areas abutting the golf course include:

- Sodding and landscaping areas within 20 feet of the golf course in general conformity with the overall landscaping pattern of the fairway area.
- Installing shrubbery and trees in the rear of the home site to soften the view of the home from the golf course.
- Managing drainage from the home site, both during and following construction of a home, in a manner to properly move drainage water in a reasonable manner, consistent with Woodside Plantation's Drainage Plan.
- Avoiding unsightly conditions on the home site which may be visible from the golf course.
- Working with the Reserve Club staff to avoid any issue which may adversely affect the golf course or its maintenance.

5.29 Longmeadow – Commonwealth Way, Quiet Oak Court (Lot 307), Sterling Grove Circle (Lots 301-306, 309-310 & 342-349), Summer Winds Circle (Lot 308) & Steeplechase Road (Lot 350):

5.29.1 Lot Coverage: Enclosed area of the dwelling unit at first floor level including garages, carports, screened and/or roof covered porches, decks and any other structures raised off ground level shall not exceed 35% of the area of the home site. Maximum total coverage to include walks, driveways and other improvements at ground level is 50% of the total lot area.

5.29.2 Minimum Sq. Ft.: 2,100 heated sq. ft.

5.29.3 Minimum Setback

	Golf Course	Non-Golf Course
• Front	20 ft.	20 ft.
• Rear	25 ft.	25 ft.
• Sides	10 ft.	10 ft.

*Lots 331- 342 have a 50 ft. rear setback

	Lot 314	**Lot 315**	**Lot 316**	**Lot 319**
• Front	20 ft.	20 ft.	20 ft.	20 ft.
• Rear	45 ft.	50 ft.	55 ft.	60 ft.
• Sides	10 ft.	10 ft.	10 ft.	10 ft.

- Driveway minimum setback is 3 feet from the property line (1 foot min. at turnaround area by garage)

5.29.4 Additional Requirements: Vinyl siding is not permitted except for gables, dormers, fascia and soffits. Vinyl shake siding is permitted in gables, dormers and as accents.

Sod must be planted to the golf course line on the side of golf course lots that faces the golf course. The appropriate ARB must approve all landscape plans. These regulations require landscape areas which are adjacent to the golf course be at a standard which complements and enhances the golf course.

The specific requirements with respect to landscaping areas abutting the golf course include:

- Sodding and landscaping areas within 20 feet of the golf course in general conformity with the overall landscaping pattern of the fairway area
- Installing shrubbery and trees in the rear of the home site to soften the view of the home from the golf course.
- Managing drainage from the home site, both during and following construction of a home, in a manner to properly move drainage water in a reasonable manner, consistent with Woodside Plantation's Drainage Plan
- Avoiding unsightly conditions on the home site which may be visible from the golf course.
- Working with the Reserve Club staff to avoid any issue which may adversely affect the golf course or its maintenance

5.30 Meadowbrook Estates – Anderson Mill Road (Lots 601-620 & 10-1 – 10-14, 10C15 & 16) & Barbaro Court:

5.30.1 Lot Coverage: First floor enclosed area of a single family home may not be constructed so as to cover or occupy, including garages, carports, screened and/or roof covered porches, may not be constructed so as to cover or occupy more than 35% of the entire area of the lot. Maximum total coverage to include decks, patios, walkways, driveways, pools and other improvements is not to exceed 50% of the total lot area.

5.30.2 Minimum Sq. Ft.: 2,200 heated sq. ft.; Lots 10-1 through10-14: 2,100 heated sq. ft.

5.30.3 Minimum Setbacks:

- Front* 35 ft.
- Rear 30 ft.
- Sides 10 ft.
- Driveway minimum setback is 3 ft. from property line
- (1-foot min. at turnaround area by garage)

*Lots 620-624 and lots 10-1 through 10-12 front setback is 25 feet

5.30.4 Additional Requirements: Vinyl siding is not permitted, except for gables and dormers, fascia and soffit. Vinyl shake siding is permitted in gables, dormers and as accents.
The appropriate ARB must approve landscape plans. Sod is required by the property owner to extend 20 feet back from the curb and, in general, no additional plantings are permitted in the 20 ft. area except for low accent, and ornamental shrubs.

Additional Requirements (Lots 10-1 through 10-12):
Lots 10-7 through 10-14 are located within wetlands. See Section 3.21 for special requirements and prohibitions.

Street Trees: Meadowbrook Estates Extension has been developed to accentuate the pristine woodlands upon which the lots are located. A primary theme is the use of street trees to ensure the focus on nature and landscaping.

- Developer will initially install approximately two (2) maple trees, the cultivar of which or the replacement with another variety of tree shall be in the sole discretion of Developer, on each Lot to establish the woodlands theme.

- The street trees will be located approximately 8 feet from the curb and approximately 60-90 feet apart.

Following initial installation, homeowners and subsequent purchasers shall be responsible for maintaining and, if necessary, relocating or replacing such trees. Pursuant to the requirements of the covenants and building guidelines applicable to Woodside Plantation and Meadowbrook Estates, the Developer, WD-ARB or, following transfer of responsibility in accordance with the covenants, the POA-ARB shall have sole discretion on applications for relocation, removal and replacement of such trees.

5.31 Grassy Creek – Grassy Creek Lane & Steeplechase Road (Lots 9.1 – 9.5 & 9A-27 – 9A-31):

5.31.1 Lot Coverage: Enclosed area of the dwelling unit at first floor level including garages, carports, screened and/or roof covered porches, decks and any other structures raised off ground level shall not exceed 45% of the area of the home site. Maximum total coverage to include walks, driveways and other improvements at ground level is 50%.

5.31.2 Minimum Sq. Ft.: 2,100 heated sq. ft.

5.31.3 Minimum Setbacks:

	Golf Course	Lake
Front*	25 ft.*	25 ft.*
Rear	25 ft.	25 ft.
Sides	10 ft.	10 ft.

Driveway minimum setback 3 feet from property line

(1-foot min. at turnaround area by garage)

* Lot 9.25, 9.14C, 9.14B will have a 15-foot front setback.

5.31.4 Additional Requirements: Vinyl siding is not permitted except for gables, dormers, fascia and soffit. Vinyl shake siding is permitted in gables, dormers and as accents.
Sod must be planted to the golf course line on the side of golf course lots that faces the golf course. The appropriate ARB must approve all landscape plans. These regulations require landscape areas which are adjacent to the golf course be at a standard which complements and enhances the golf course.

The specific requirements with respect to landscaping areas abutting the golf course include:

- Sodding and landscaping areas within 20 feet of the golf course in general conformity with the overall landscaping pattern of the fairway area.
- Installing shrubbery and trees in the rear of the home site to soften the view of the home from the golf course.
- Managing drainage from the home site, both during and following construction of a home, in a manner to properly move drainage water in a reasonable manner, consistent with Woodside Plantation's Drainage Plan.
- Avoiding unsightly conditions on the home site which may be visible from the golf course.
- Working with the Reserve Club staff to avoid any issue which may adversely affect the golf course or its maintenance.

5.32 Silver Meadow – Silver Meadow Court:

5.32.1 Lot Coverage: Enclosed area of the dwelling unit at first floor level including garages, carports, screened and/or roof covered porches, decks and any other structures raised off ground level shall not exceed 45% of the area of the home site. Maximum total coverage to include walks, driveways and other improvements at ground level is 50%.

5.32.2 Minimum Sq. Ft.: 1,800 heated sq. ft.

5.32.3 Minimum Setbacks:

- Front 15 ft.

- Rear - Lots 1-14 25 ft.
- Rear - Lots 15-21 10 ft.
- Sides 10 ft
- Driveway minimum setback 3 feet from property line (1-foot min. at turnaround area by garage)

5.32.4 Additional Requirements: Vinyl siding is not permitted except for gables, dormers, fascia and soffit. Vinyl shake siding is permitted in gables, dormers and as accents.
Sod must be planted to the golf course line on the side of golf course lots that faces the golf course. The appropriate ARB must approve all landscape plans. These regulations require landscape areas which are adjacent to the golf course be at a standard which complements and enhances the golf course.

The specific requirements with respect to landscaping areas abutting the golf course include:

- Sodding and landscaping areas within 20 feet of the golf course in general conformity with the overall landscaping pattern of the fairway area.
- Installing shrubbery and trees in the rear of the home site to soften the view of the home from the golf course.
- Managing drainage from the home site, both during and following construction of a home, in a manner to properly move drainage water in a reasonable manner, consistent with Woodside Plantation's Drainage Plan.
- Avoiding unsightly conditions on the home site which may be visible from the golf course.
- Working with the Reserve Club staff to avoid any issue which may adversely affect the golf course or its maintenance.

5.33 Stonebridge – Lady Banks Road, Sea Grass Lane (Lots 8A-01 – 8A-15 & 8A-18) & Three Runs Creek Way (Lots 8A-43 – 8A-63, 8B 1-5):

5.33.1 Lot Coverage: Enclosed area of the dwelling unit at first floor level including garages, carports, screened and/or roof covered porches, decks and any other structures raised off ground level shall not exceed 45% of the area of the home site. Maximum total coverage to include walks, driveways and other improvements at ground level is 50%.

5.33.2 Minimum Sq. Ft.: 2,000 heated sq. ft.

5.33.3 Minimum Setbacks:

	Golf Course	Interior
• Front	25 ft.	25 ft.
• Rear	25 ft.	25 ft.
• Sides	10 ft.	10 ft.

Driveway minimum setback 3 feet from property line
(1-foot min. at turnaround area by garage)

5.33.4 Additional Requirements: Vinyl siding is not permitted except for gables, dormers, fascia and soffit. Vinyl shake siding is permitted in gables, dormers and as

accents.
Sod must be planted to the golf course line on the side of golf course lots that faces the golf course. The appropriate ARB must approve all landscape plans. These regulations require landscape areas which are adjacent to the golf course be at a standard which complements and enhances the golf course.

The specific requirements with respect to landscaping areas abutting the golf course include:

- Sodding and landscaping areas within 20 feet of the golf course in general conformity with the overall landscaping pattern of the fairway area.
- Installing shrubbery and trees in the rear of the home site to soften the view of the home from the golf course.
- Managing drainage from the home site, both during and following construction of a home, in a manner to properly move drainage water in a reasonable manner, consistent with Woodside Plantation's Drainage Plan.
- Avoiding unsightly conditions on the home site which may be visible from the golf course.
- Working with the Woodside Plantation Country Club staff to avoid any issue which may adversely affect the golf course or its maintenance.

5.34 Twin Ponds Estates – Bristlecone Drive (Lots 516, 517& 523-525), Steeplechase Road Lots (501-503 & 536) & Twin Ponds Lane:

5.34.1 Lot Coverage: Enclosed area of the dwelling unit at first floor level including garages, carports, screened and/or roof covered porches, decks and any other structures raised off ground level shall not exceed 35% of the area of the home site.

Maximum total coverage to include walks, driveways and other improvements at ground level is 50% of the total lot area.

5.34.2 Minimum Sq. Ft: 2,200 heated sq. ft.

5.34.3 Minimum Setbacks:

- Front Lots 501-517 & Lot 525 20 ft.
- Lots 523 & 524 25 ft.
- Lots 526-534 & 536 30 ft.
- Lot 535 50 ft.

- Rear 25 ft.

with the exception of:
Lots 523 & 524 30 ft.
Lots 501 & 502 20 ft.
Sides 10 ft.
Driveway minimum setback 3 feet from property line
(1-foot min. at turnaround area by garage)

5.34.4 Additional Requirements: Vinyl siding is not permitted except for

gables, dormers, fascia and soffit. Vinyl shake siding is permitted in gables, dormers and as accents.
The appropriate ARB must approve landscape plans. Sod is required to extend 20 feet back from the curb and, in general, no additional plantings are permitted in the 20 foot area except for low accent, and ornamental shrubs.

5.35 Stonehurst – Cameron Alley, Rock Maple Court (Lots 409-422) & Summer Winds Circle (Lots 425 – 427):

5.35.1 Lot Coverage: Enclosed area of the dwelling unit at first floor level including garages, carports, screened and/or roof covered porches, decks and any other structures raised off ground level shall not exceed 35% of the area of the home site. Maximum total coverage to include walks, driveways and other improvements at ground level is 50% of the total lot area.

5.35.2 Minimum Sq. Ft. : 2,000 heated sq. ft.

5.35.3 Minimum Setbacks:

	Golf Course	Non Golf Course
• Front	20 ft.*	0 ft.*
• Rear	25 ft.	25 ft.
• Sides	10 ft.	10 ft.

- Driveway minimum setback 2 feet from property line (1-foot min. at turnaround area by garage)

*Lot 401, 402, 403, 404, 405, 406, 407, 408 & 414 will have a 15-ft. front setback

5.35.4 Additional Requirements: Vinyl siding is not permitted except for gables, dormers, fascia and soffit. Vinyl shake siding is permitted in gables, dormers and as accents.
Sod must be planted to the golf course line on the side of golf course lots that faces the golf course. The appropriate ARB must approve all landscape plans. These regulations require landscape areas which are adjacent to the golf course be at a standard which complements and enhances the golf course.
The specific requirements with respect to landscaping areas abutting the golf course include:

- Sodding and landscaping areas within 20 feet of the golf course in general conformity with the overall landscaping pattern of the fairway area.
- Installing shrubbery and trees in the rear of the home site to soften the view of the home from the golf course.
- Managing drainage from the home site, both during and following construction of a home, in a manner to properly move drainage water in a reasonable manner, consistent with Woodside Plantation's Drainage Plan.
- Avoiding unsightly conditions on the home site which may be visible from the golf course.
- Working with the Reserve Club staff to avoid any issue which may adversely affect the golf course or its maintenance.

5.36 Pine Glen – Pinyon Pine Loop:

5.36.1 Lot Coverage: Enclosed area of the dwelling unit at first floor level including garages, carports, screened and/or roof covered porches, decks and any other structures raised off ground level shall not exceed 35% of the area of the home site. Maximum total coverage to include walks, driveways and other improvements at ground level is 50% of the total lot area.

5.36.2 Minimum Sq. Ft.: 1,650 heated sq. ft.

5.36.3 Minimum Setbacks:

- Front - 10 ft. Courtyard Garage Entry Home

  20 ft. Front Garage Entry Home

- Rear - 701-706 - 30 ft. (inclusive of the 25 ft. no-clear buffer)

  707- 713 - 25 ft. (inclusive of the 10 ft. no-clear buffer) 714-718 - 30 ft. (inclusive of the 25 ft. no-clear buffer) 719-721 - 20 ft.
- Sides - 10 ft.
- Driveway minimum setback 3 feet from property line
  (1-foot min. at turnaround area by garage)

5.36.4 Additional Requirements:

Architecture: Homes to be constructed in Pine Glen are limited to the floor plans and elevations offered in the "Pine Glen Collection" originally designed by TD Architects and built by Carolina Signature Homes. Customization of homes in Pine Glen is encouraged, although substantial deviation from the front elevation design elements of the "Pine Glen Collection" is not permitted. Most homes in Pine Glen are designed to accommodate rear covered porches for extended outdoor living space, and flexible use of second floor spaces for efficient and cost effective space utilization.

Elevation Materials: Home elevation materials are to include brick and natural cedar shakes as the predominant materials. Stucco and stone facing will be considered mainly as accent materials, subject to color and style. Cement board materials will be permitted for trim and accents, although their use as a major design element is discouraged. On elevations where a shake product is shown, only painted or stained natural shakes are allowed. Vinyl siding is not permitted except for gables, dormers, fascia and soffit. Vinyl shake siding is permitted in gables, dormers and as accents.

Landscaping: Landscape responsibilities shall include:

- Grassing and landscaping areas within 20 feet of the front road curb line with grass and tasteful shrubbery and trees.
- On lots bordering Steeplechase Road installing shrubbery and trees in the rear of home sites to soften and buffer the view of your home from the road,

including a no- clear buffer area 18' from the rear lot line (no significant trees may be removed, lower level buffering shrubbery and other screening plantings are encouraged).

- On lots that have a rear no-clear, wooded buffer, no clearing of significant trees is permitted and planting of natural trees, lower level buffering shrubbery and screening plantings is encouraged.

These Building and Landscape Guidelines require enhanced landscaping of all areas of home sites that are adjacent to Steeplechase Road. Landscaping in this area must be done at a standard which complements and enhances the views from Steeplechase Road. The landscape character in this area should be the same as the view from the street to the front of your home site.

Buffers: Lots 701-706 shall have a rear wooded, no-clear buffer of 25 feet backing up to the right of way of Steeplechase Road. Included within this buffer is a decorative 3-rail equestrian- style fence which shall be owned and maintained by the homeowners of Lots 701-706.

Lots 707-713 shall have a rear wooded, no-clear buffer of 10 feet backing up to adjacent lots, which shall be included at the outside edge of the 25 foot rear setback.

Lots 714-718 shall have a 25 foot no-clear buffer at the outside edge of the 30 foot rear setback.

5.37 Hanlon Woods – Hanlon Woods Court:

5.37.1 Lot Coverage: Enclosed area of the dwelling unit at first floor level including garages, carports, screened and/or roof covered porches, decks and any other structures raised off ground level shall not exceed 35% of the area of the home site. Maximum total coverage to include walks, driveways and other improvements at ground level is 50% of the total lot area.

5.37.2 Minimum Sq. Ft.: 2,000 heated sq. ft**.**

5.37.3 Minimum Setbacks:

- Front 25 ft.
- Rear 25 ft.
- Sides 10 ft.
- Driveway minimum setback 3 feet from property line*

  *(1-foot min. at turnaround area by garage)

5.37.4 Additional Requirements:

Elevation Materials: Vinyl siding is not permitted except for gables, dormers, fascia and soffit. Vinyl shake siding is permitted in gables, dormers and as accents.

Driveway: Due to driveway length, and as an exception to the general building guidelines of Woodside Plantation, asphalt driveways will be permitted from the

curb line to the home.
Landscaping: The appropriate ARB must approve all landscape plans. Sod is required by the property owner to extend 20 feet back from the curb line and, in general, no additional plantings are permitted in the 20 foot area except for low accent, and ornamental shrubs.

5.38 Summer Hill - (Section 14-A, Phase IV) Summer Winds Circle – (Lots 14-01 - 14-12):

5.38.1 Lot Coverage: Enclosed area of the dwelling unit at first floor level including garages, carports, screened and/or roof covered porches, decks and any other structures raised off ground level shall not exceed 35% of the area of the home site. Maximum total coverage to include walks, driveways and other improvements at ground level is 50% of the total lot area.

5.38.2 Minimum Sq. Ft.: 1,800 heated sq. ft.

5.38.3 Minimum Setbacks:

	Golf Course	Non Golf Course
• Front	20 ft.	20 ft.
• Rear	25 ft.	25 ft.
• Sides	10 ft.	10ft.

- Driveway minimum setback 2 feet from property line

  (1 foot min. at turnaround area by garage)

5.38.4 Additional Requirements:

Elevation Materials: Vinyl siding is not permitted except for gables, dormers, fascia and soffit. Vinyl shake siding is permitted in gables, dormers and as accents.

Landscape: The appropriate ARB must approve all landscape plans. The ARB may provide a preliminary approval for commencement of construction, but reserves the right to approve or disapprove final landscape, as installed, as a result of deviation from approved plans, site conditions on the lot which are not apparent on the landscape plan, execution of the plan, drainage and other condition reasonably necessary to provide landscaping in keeping with the neighborhood.

Landscape budgets in Summer Hill must be a minimum of $10,000 per home. Front and rear portions of the lot must be sodded with an approved grass consistent with that used in Woodside Planation. Shrubs, bushes and trees must be placed around the home and on the lot to provide a natural setting consistent with Woodside's character. Areas which are not grassed should be covered with a natural ground cover such as pine straw or wood mulch.
Stone ground covers must be approved separately by the appropriate ARB before installation. Mulched or areas of pine straw should also have appropriate shrubs and ground covering plantings such as vines, flowers, shrubs, ornamental grasses, etc. in the

beds, with a general requirement that at least one plant should be provided for a minimum of every 25 square feet.

Additional Requirements for Lots Adjacent to the Golf Course: These regulations require landscape areas which are adjacent to the golf course be at a standard which complements and enhances the golf course. Landscape plans may not include substantially unimpeded views of a home from the golf course and submission of such plans may result in non-approval of the plans. The specific requirements with respect to landscaping areas of your home site abutting the golf course include:

- On golf course lots, the side facing the golf course, sod must be planted to the property line or golf course line if closer.
- Grassing and landscaping areas within 20 feet of the golf course in general conformity with the overall landscaping pattern of the fairway area.
- Installing shrubbery and trees in the rear of your home site to soften the view of your home from the golf course, with at least one tree or a grouping of shrubbery every 40 feet recommended.
- Mulching and plantings of beds as required above.
- Avoiding unsightly conditions on your home site which may be visible from the golf course.

Homeowners are encouraged to work with the Reserve Club staff to avoid any issues which may adversely affect the golf course or its maintenance.

Additional Requirements for Lots Adjacent to Summer Hill Park: Owners of lots adjacent to Summer Hill Park are required to landscape the areas of your lot adjacent to the park in a manner that complements or is consistent with the landscape theme of Summer Hill Park.
Owners may be required to utilize particular trees, shrubs or other plant and landscape materials that will result in a landscape plan consistent with its location. Restrictions on fencing, fencing materials and other hardscape plans may be more limiting on lots

adjacent to Summer Hill Park to ensure that the aesthetics and views of the park and surrounding homes are preserved.

5.39 The Meadows – Phase IV, Section 8, Lots 801-832, Bluet Loop, Whimbrel Loop, Evenwillow Way:

5.39.1 Lot Coverage: Enclosed area of the dwelling unit at first floor level including garages, screened and/or roof covered porches, decks and any other structures raised off ground level shall not exceed 35% of the area of the home site. Maximum total coverage to include walks, driveways and other improvements at ground level is 50% of the total lot area.

5.39.2 Minimum Sq. Ft.: 1,450 heated Sq. Ft.

5.39.3 Minimum Setbacks:

	Side yard Garage Entry	Front Garage Entry
• Front	15 ft.	20 ft.
• Rear	20 ft.	20 ft.
• Sides	7.5 ft.	7.5 ft.

- Driveway minimum setback 3 feet from property line*

  * (1 foot min. at turnaround area by garage)

5.39.4 Additional Requirements:

Architecture: Homes to be constructed in The Meadows are limited to the floor plans and elevations offered in "The Meadows Collection". Moderate customization of homes in The Meadows may be approved, although substantial deviation from the front elevation design elements of "The Meadows Collection" is not permitted. The Meadows Collection homes are single level; no second level or bonus rooms may be added to homes in The Meadows. The Meadows Collection homes are designed to accommodate rear covered porches for extended outdoor living space; therefore, covered rear porches are preferred in The Meadows. All homes in The Meadows Collection are designed with courtyard entry garages and front entry garages are discouraged.

Elevation Materials: Home elevation materials are to include cement board materials as the predominant façade material with brick as the foundation material, subject to color and style. Stucco, stone, brick and natural cedar shakes will be considered as accent materials, subject

to color and style. Vinyl siding will not be permitted; although vinyl shake siding is permitted in gables, dormers and as accents.

Landscape: The use of plant materials from the Southern Living® Plant Collection is encouraged in The Meadows. The specific requirements with respect to landscaping areas shall include:

- Landscaping an area 20 feet back of the front curb with grass, shrubbery and trees.
- On lots which have a rear undisturbed buffer, no clearing is permitted and planting natural trees, buffering shrubbery and screening plantings is encouraged.
- On lots which adjoin The Meadows Park, the entire rear lot must be landscaped with grass, shrubbery and trees to soften and buffer the view to The Meadows Park.

5.40 The Highlands – Balfour Court, Earlston Alley, Glenlevit Drive, Thornhill Drive:

5.40.1 Lot Coverage: Not Applicable

5.40.2 Minimum Sq. Ft.: The minimum area of heated and/or cooled space,

measured outside to outside of exterior walls shall be 2,000 sq. ft. on the main level and 2400 sq. ft. total.

5.40.3 Minimum Setbacks:

Setbacks: The following are the minimum setbacks, unless shown differently on applicable plats:

- Front 5 ft.
- Side 7.5 ft.
- Rear 10 ft.
- Driveways are permitted to the property line or in some cases may be shared.

5.40.4 Additional Requirements:

Architecture: Home Design Philosophy: Homes in The Highlands in the Reserve at Woodside Plantation are designed with an elegant, refined look, with a goal of complementing the Reserve club while emphasizing outdoor living in the rear of the Homes. The unique location of The Highlands, directly adjacent to Holes No. 1 of The Reserve Course and visible from the Reserve Clubhouse, creates an ideal setting, but one which must blend with, and compliment, the Reserve Course and Clubhouse. In order to create a consistent architectural look throughout the area, the architectural look has been established by the offering of Carriage Home, St. Regis, Viceroy and Courtyard plans. Owners must realize

that substantial authority will be vested with The Highlands Neighborhood Association (the "Association") in determining the suitability of any design modifications submitted for construction in The Highlands. These requirements increase the cost of construction, but are necessary to create a neighborhood of refinement, unique character and beauty.

- **Rear Patios & Courtyards:** The integration of a rear patio, with portions covered at the rear portion of the Home with a consistent look is a sought after design feature of The Highlands. Interior courtyards also are an important design element of The Highlands.
- **Garage Orientation:** Garage orientation will vary as lot configurations dictate; Carriage Homes, St. Regis and Viceroy plans; courtyard design, with Garage positioned on the front of the home facing the street. Attached Garages are allowed, Courtyard entry is preferred, and however Lot # 15.5 may be front load. Courtyard plan will have rear orientation with garage facing the alley or private drive.
- **Courtyard Home Privacy Walls and fencing:** Due to the orientation of the lots and the desire to create a private courtyard setting, Lots 15.26, 15.27, 15.28. 15.29 will require a brick privacy wall and fencing to create an enclosed courtyard (as built on lot 15.27). There will be an easement on each side of the common property line of 5 feet for the installation of the walls by the builder and maintenance and repair by the association and encroachment with adjacent lot.

Building Requirements: There will be the following requirements for homes constructed in the Highlands:

The Highlands exteriors are maintained by the Highlands Homeowners Association. This requirement necessitates that the quality, type and style of materials used must be consistent with the Building Guidelines.

- **Height:** Minimum plate heights of 10 feet are required.
- **Exterior Brick:** All homes will be constructed of brick and cement board siding combinations. "Spalding Tudor" by General Shale will be the exclusive brick, but may be substituted with similar style and quality if required due to manufacturer changes in brick color, style or discontinuation etc. Mortar will be "Ivory Buff ' with white sand.
- **Siding:** Cement board siding is required for all non-bricked areas. Siding reveal, corner boards, window wraps, head pieces etc. will be substantially similar to the Model home on Lot 15.27.
- **Roofing:** CertainTeed "Landmark" lifetime, architectural grade shingle shall be required, color to be Weathered Wood or substantially similar style and quality if required due manufacturers changes in color, style; discontinuations etc. Metal standing seam (dark bronze color) roofing required on short gable returns and short overhangs.
- **Windows:** All windows (and patio doors and/or sliders) will be Pella "Pro- Line" (Poplar White color) with simulated divided lite glass or substantially similar style and quality if required due manufacturer changes in color, style, discontinuations etc.
- **Garage Doors:** Amarr, Oak Summit, Bead Board with "Stockton" long panel window insert or substantially similar style and quality if required due manufacturer changes in color, style, discontinuations etc.
- **Driveways:** All driveways (and for the most part, walkways) shall be constructed utilizing pavers manufactured by Low Country Pavers, style "2 Piece cobble", and color Toasted Almond. or substantially similar style and quality if required due manufacturer changes in color, style, discontinuations etc. Longer driveways, private drive serving Lots 15.24 and 15.25 and Courtyard Plan are required to have paver aprons to the RO.W's. with “broom finished” concrete thereafter.

- **Decks & Patios:** No elevated or wooden decks are permitted. Patios may be constructed of concrete, with brick perimeters.
- **Exterior Lighting:** All exterior lighting fixtures will be match in color and style the Model home at Lot 15.27. or substantially similar style and quality if required due manufacturer changes in color, style, discontinuations etc.
- **Miscellaneous:** Exterior fireplaces and well landscaped fire-pits are permitted.

Landscaping: The exterior landscape of each lot is the responsibility of the Owner, although the Association retains exclusive control over landscaping throughout The Highlands. Landscaping is critical to achieving and maintaining the natural beauty and ambiance of the neighborhood. The following requirements must be adhered to by all Owners:

- **Minimum Landscaping Allowance:** A minimum allowance of $9,000 per Lot must be expended on landscaping, excluding patios and hardscape.
- **Plant Material:** Large plants are strongly encouraged, as are natural, indigenous plants. Vines and ground cover are also strongly preferred to open, pine straw or mulched areas.
- **Beds:** Large pine straw areas in excess of 10 square feet without plantings are strongly discouraged. Approved ground covers and/or vines are required in these areas. Grassing of Lot areas without plantings, and which have proper conditions, is strongly encouraged.
- **Areas adjacent to the Golf Course require special attention:** Where applicable, grassing should be extended to the Reserve Course. The rear of lots backing up to the Reserve Course should seek to retain and/or supplement nature plant buffers to avoid wide open, unimpeded spans viewing the Reserve Course (or Home from the Reserve Course). A minimum of 4 specimen trees (of reasonable caliper) should be planted (or maintained if existing) to buffer the rear of each Lot facing the Golf Course, with additional ground plantings to create a natural transition between the Lot and the Reserve Course.

5.41 Longmeadow Section 3B – Commonwealth Way (Lots 1 - 24):

5.41.1 Lot Coverage: First floor enclosed area of a single family home may not be constructed so as to cover or occupy, including garages, carports, screened and/or roof covered porches, may not be constructed so as to cover or occupy more than 35% of the entire area of the lot. Maximum total coverage to include decks, patios, walkways, driveways, pools and other improvements is not to exceed 50% of the total lot area.

5.41.2 Minimum Sq. Ft.: 1,800 heated sq. ft.

5.41.3 Minimum Setbacks:

Front	20 ft. courtyard
Front	25 ft. front facing
Rear	30 ft. (35 Feet recommended)
Sides	10 ft.

Driveway minimum setback is 2 ft. from property line (1-foot min. at turnaround area by garage)

5.41.4 Additional Requirements: Home Construction Building guidelines in Longmeadow encourage combinations of exterior building materials such as brick, stone, stucco and wood or cementitious siding. Building guidelines in Longmeadow limit the use of vinyl siding on homes. No vinyl siding will be permitted on the front or rear of homes except for gables (limited areas) and second story dormers, fascia and soffit. Vinyl shake siding may be approved for use in gables, dormers and as accents.

Landscape
The ARB must approve all landscape plans prior to installation. Landscape

budgets in Longmeadow must be a minimum of $18,000 per home Street trees, if included on a home site in Longmeadow, must be maintained and replaced by the homeowner if damaged or dead.

Additional Requirements for Lots adjacent to Golf Course
The yard area (as viewed from the course) must be landscaped in generally the same manner as the front of the home site (as viewed from the street). Landscape plans may not include substantially unimpeded views of a home from the golf course and submission of such plans may result in non-approval of the plans. Specific responsibilities with respect to landscaping areas of the home site abutting The Reserve Club's golf course include:

- On golf course lots, the side facing the golf course, landscaping must be extended and planted to the property line or golf course line, if closer.

- On lots proximate to Bogey Pond, landscape plans must incorporate the area between the rear lot line and the pond edge. The ARB will have the discretion to approve landscaping on the extended property, regardless of whether owned by the lot owner, to ensure a consistent and aesthetically pleasing view from the golf course across the pond. Irrigation systems must be installed such that any landscaping on the property between the rear lot line and pond edge is sufficiently irrigated.

- Notwithstanding the foregoing requirements for landscaping areas of the golf course between the rear lot line and golf or pond edge, the golf course reserves the right to access and perform maintenance on its property for any purpose.

- Grassing and landscaping areas within 20 feet of the golf course must be in general conformity with the overall landscaping pattern of the fairway area.

- Installing, or maintaining existing, shrubbery and significant trees in the rear of the home site is required to avoid unobstructed views of homes from the golf course. A minimum of 3 trees and groupings of shrubbery with trees spaced no more than 40 feet apart and at least one shrub for every 25 sq. ft. of mulched bed area is required.

- Supplementing existing pines and other specimen trees with azaleas or other native plant material to create a natural landscape view from the golf course is encouraged.

- Clearing of trees within 25 feet of the golf course will be limited.

5.42 True Cedar Way:

5.42.1 Lot Coverage: The first-floor enclosed area of the dwelling unit including garages, carports, screened and/or roof covered porches shall not exceed 45% of the area of the home site. Maximum total coverage to include decks, patios, walkways, driveways, pools and other improvements are not to exceed 50% of the total lot area (Exceptions: Lot 3 and Lot 10 not to exceed 55%).

5.42.2 Minimum Sq. Ft.: 1,450 heated sq. ft.

5.42.3 Minimum Setbacks:

- Front 10 ft. with garage opening toward street
  5 ft. with side entry/courtyard garage
- Rear Golf Course Lot - 20 ft.
  Non-golf Course Lot - 15 ft.
- Sides 10 ft
- Driveway minimum setback 2 feet from property line

*(1 foot min. at turnaround area by garage)

5.42.4 Additional Requirements:

Elevation Materials: High quality vinyl siding is permitted only on Lots 15, 16, and 17 with brick, stucco or stone required on front of home. Vinyl & vinyl shake siding is permitted in gables, dormers, fascia and soffits and as accents on all homes in True Cedar Way.

Landscape: The POA ARB must approve all landscape plans. The ARB may provide a preliminary approval for commencement of construction, but reserves the right to approve or disapprove final landscape, as installed, as a result of deviation from approved plans, site conditions on the lot which are not apparent on the landscape plan, execution of the plan, drainage and other condition reasonably necessary to provide landscaping in keeping with the neighborhood.

Front and rear portions of the lot must be sodded with an approved grass consistent with that used in Woodside Planation. Shrubs, bushes and trees must be placed

around the home and on the lot to provide a natural setting consistent with Woodside's character. Areas which are not grassed should be covered with a natural ground cover such as pine straw or wood mulch. Mulched or areas of pine straw shall have appropriate shrubs and ground covering plantings such as vines, flowers, shrubs, ornamental grasses, etc. in the beds, with a general requirement that at least one plant should be provided for a minimum of every 25 square feet.

Additional Requirements for Lots Adjacent to the Golf Course: These regulations require landscape areas which are adjacent to the golf course be at a standard which complements and enhances the golf course. Landscape plans may not include substantially unimpeded views of a home from the golf course and submission of such plans may result in non-approval of the plans. The specific requirements with respect to landscaping areas of the home site abutting the golf course include:

- Grassing and landscaping areas within 20 feet of the golf course must be in general conformity with the overall landscaping pattern of the fairway area.
- Install shrubbery and trees in the rear of the home site to soften the view of the home from the golf course.
- Mulching and plantings of beds as required above.

5.43 Oakman's Bluff (Lots 26B-1 - 26B-14)

5.43.1 Lot Coverage: The first-floor enclosed area of the dwelling unit including garages, carports, screened and/or roof covered porches shall not exceed 35% of the area of the home site. Maximum total coverage to include decks, patios, walkways, driveways, pools and other improvements are not to exceed 50% of the total lot area.

5.43.2 Minimum: Sq. Ft.: 2,100 heated sq. ft

5.43.3 Minimum Setbacks:

Golf Course Home Sites

- Front 20 ft. Courtyard Garage Entry
  25 ft. Front Garage Entry
- Rear 35 ft. recommended; refer to record plat for requirements*
- Sides 10 ft

Lake Home Sites

- Front 20 ft. Courtyard Garage Entry Home
  25 ft. Front Garage Entry Home
- Rear 25 ft. recommended; refer to record plat for requirements*
- Sides 10 ft.

*Site conditions may require different setback lines. Check the recorded plat for Oakman's Bluff to confirm setbacks specific to any particular lot.

Driveway minimum setback 2 feet from property line (1 foot min. at turnaround area by garage)
Other than the above and other provisions of the Building and Landscape Guidelines, lots which back to a wooded buffer between the rear of the lot and golf course property shall not be considered to back to a golf course but rather a wooded area for purposes of determining minimum setbacks for pools, fences and other structures. A minimum of 25 feet must be maintained between the golf play envelope (out of bounds stake) and pools, fences and other structures. Some or all of such 25 feet may be within a wooded buffer area between the golf play envelope and the property line of lots adjacent thereto.

5.43.4 Additional Requirements:

- On golf course lots, the side facing the golf course, landscaping must be extended and planted to the property line or golf course line.
- Grassing and landscaping areas within 20 feet of the golf course in general

conformity with the overall landscaping pattern of the fairway area.

- Installing, or maintaining existing, shrubbery and significant trees in the rear of the home site is required to avoid unobstructed views of homes from the golf course. A minimum of 3 trees and groupings of shrubbery with trees spaced no more than 40 feet apart are required.
- Supplementing existing pines and other specimen trees with azaleas or other native plant material to create a natural landscape view from the golf course is encouraged.
- Clearing of trees within 25 feet of the golf course will be limited.
- Notwithstanding the foregoing, lots which abut the wooded buffer between the rear of lot lines and the golf course envelope may be left in a natural state, if desired by the homeowner and approved by the appropriate ARB.
- Rip rap, stone diffusion devices are acceptable features to control erosion, but should be employed in a reasonable manner, that does not unduly impact neighboring properties, either aesthetically or for storm water control purposes.

Landscape: Landscape budgets in Oakman's Bluff must be a minimum of $18,000 per home.

5.44 Bristlecone Ridge - Bristlecone Drive (Lots 518-613), Chrysalis Bend, Papillon Loop):

5.44.1 Lot Coverage: The first-floor enclosed area of the dwelling unit including garages, carports, screened and/or roof covered porches shall not exceed 35% of the area of the home site. Maximum total coverage to include decks, patios, walkways, driveways, pools and other improvements are not to exceed 50% of the total lot area.

5.44.2 Minimum Sq. Ft.: 1,800 heated sq. ft.

5.44.3 Minimum Setbacks:

Bristlecone Drive Home Sites

- Front 30 ft. with garage opening toward street
  25 ft. with side entry/courtyard garage
- Rear 25 ft.
- Sides 10 ft
- Driveway minimum setback 2 feet from property line

Chrysalis Bend and Papillon Loop Home Sites

- Front 25 ft. with garage opening toward street
  20 ft. with side entry/courtyard garage
- Rear 25 ft.
- Sides 10 ft
- Driveway minimum setback 2 feet from property line

Site conditions may require different setback lines. Check the recorded plat for Bristlecone to confirm setbacks specific to any particular lot.

5.44.4 Additional Requirements:

Elevation Materials: Vinyl siding is not permitted except for gables, dormers, fascia and soffit. Vinyl shake siding is permitted in gables, dormers and as accents.

Landscape: Landscape budgets in Bristlecone must be a minimum of $18,000 per home.
Homeowners are encouraged to include at least one street tree on landscape plans. Several varieties of oaks are recommended (see list below). Other varieties of trees will be considered as requested. Street trees, if included on a home site in Bristlecone, must be maintained and replaced by the homeowner if damaged or dead.

Recommended street trees:
Willow Oak
Shumard Oak
Nuttall Oak

Additional Requirements for Lots Bordering a Park or Nature Trail/Area:
Many of the lots within Bristlecone border a nature area with walking trail and/or overlook the Butterfly Park. Landscape plans for these lots should include attractive buffers at the rear to soften the appearance of homes from the nature area and walking trail and at the front of the home as viewed from the Butterfly Park using butterfly friendly trees, shrubs and plants where appropriate (see list of recommended plants below). Other varieties of plants which serve as nectar or host plants will be considered as requested. Landscape plans may not include substantially unimpeded views of a home from the Butterfly Park or nature area and walking trail and submission of such plans may result in non-approval of the plans.

Recommended butterfly-friendly trees, shrubs and plants:
Vitex Tree
Tulip Poplar
Butterfly Bush
Weigelia
Common
Milkweed
Cosmos
Dill
Parsley

Specific responsibilities with respect to landscaping these home sites include:

- Supplementing existing pines and other specimen trees with butterfly friendly trees, shrubs, plants, azaleas or other native plant material to create a natural landscape view.

- Clearing of trees within 25 feet of the rear property line will be limited.
- Mulching and planting of beds as required above.
- Avoiding unsightly conditions on your home site which may be visible from adjoining property, including the Butterfly Park and nature area and walking trail.
- Notwithstanding the foregoing, lots which abut the nature area at the rear of lots may be left in a natural state, if desired by the homeowner and approved by the ARB.

5.45 Summer Hill (Summer Winds Extension) - Summer Winds Circle – (Lots 15-3 – 15-27); Beauty Berry Way – (Lots 1-35):

5.45.1 Lot Coverage: The first-floor enclosed area of the dwelling unit including garages, carports, screened and/or roof covered porches shall not exceed 45% of the area of the home site. Maximum total coverage to include decks, patios, walkways, driveways, pools and other improvements are not to exceed 50% of the total lot area (Exceptions: Lot 3 and Lot 10 not to exceed 55%).

5.45.2 Minimum Sq. Ft.: Minimum Square Feet 1,800 heated sq ft.

5.45.3 Minimum Setbacks:

Golf Course Home Sites

- Front 25 ft. (except Lot 3 which has a 15 ft. front setback)
- Rear 30 ft.
- Sides 10 ft.
- Driveway minimum setback 2 feet from side property line.

5.45.4 Additional Requirements:

Landscape: The ARB must approve all landscape plans. The ARB may provide a preliminary approval for commencement of construction but reserves the right to approve or disprove final landscape, as installed, as a result of deviation from approved plans, site conditions on the lot which are not apparent on the landscape plan, execution of the plan, drainage and other conditions reasonably necessary to provide landscaping in keeping with the neighborhood.

Landscape budgets in Sumer Hill must be a minimum of$20,000 per home. Front and rear portions of the lot must be sodded with an approved grass consistent with that used in Woodside. Shrubs, bushes and trees must be placed around the home and on the lot to provide a natural setting consistent with Woodside's character. Areas which are not grassed should be covered with a natural ground cover such as pine straw or wood mulch (stone covers must be approved separately by the ARB before installation). Mulched or pine strawed areas should also have appropriate shrubs and ground covering plantings (vines, flowers, shrubs, ornamental grasses. etc.) in the beds, with a general requirement that at least one plant should be provided for a minimum of every 25 square feet.

Additional Requirements for Lots adjacent to Golf Course
Woodside Plantation's regulations require you to landscape areas of your home site which are adjacent to The Reserve Club's golf course at a standard which complements and enhances the golf course. This area (as viewed from the course) must be landscaped in generally the same manner as the front of your home site (as viewed from the street). Landscape plans may not include substantially unimpeded views of a home from the golf course and submission of such plans may result in non-approval of the plans. The specific responsibilities with respect to landscaping areas of the home site abutting The Reserve

Club's golf course include:

- On golf course lots, the side facing the golf course, sod must be planted to the property line or golf course line if closer.
- Grassing and landscaping areas within 20 feet of the golf course in general conformity with the overall landscaping pattern of the fairway area.
- Installing shrubbery and trees in the rear of your home site to soften the view of your home from the golf course, with at least one significant tree (natural pine, oak, maple or decorative flowering tree) every 40 feet required unless specifically approved in writing by the ARB. A grouping of shrubbery may substitute for a tree with ARB approval.
- Clearing of significant trees within 25 feet of the golf course is limited and will require ARB approval.
- Mulching and planting of beds as required above.
- A voiding unsightly condition on your home site which may be visible from the golf course. Homeowners are encouraged to work with The Reserve Club staff to avoid any issues which may adversely affect the golf course or its maintenance

5.46 Highpoint - Kirkwall Court (Lots 17-1 – 17-17):

5.46.1 Lot Coverage: The first-floor enclosed area of the dwelling unit including garages, carports, screened and/or roof covered porches shall not exceed 35% of the area of the home site. Maximum total coverage to include decks, patios, walkways, driveways, pools and other improvements are not to exceed 50% of the total lot area.

5.46.2 Minimum Sq. Ft.: Minimum Square Feet 1,750 heated sq. ft.

Second Levels - No homes shall include second levels, bonus rooms or finished walkout basements without the prior written approval of the ARB. Approval may be withheld in the sole discretion of the ARB to maintain appropriate setbacks from the side lot lines, space requirements between structures or the streetscape intended for Highpoint. Notwithstanding the foregoing, Lots 8, 9, 10, 11 and 12 are configured such that a bonus room may be allowed with ARB approval of the design.

5.46.3 Minimum Setbacks:

- Front 20 ft.
- Rear 25 ft.

- Sides 10 ft. although the ARB may approve 7.5 ft. on Lots 1 thru 7 and 11 thru 17

Site conditions may require different setback lines. Check the recorded plat for Highpoint to confirm setbacks specific to any particular lot.

- Driveway minimum setback 2 feet from side property line.

5.46.4 Additional Requirements:

Architecture:

- Home Design Philosophy - In order to create a consistent architectural appeal for this neighborhood, the Developer has commissioned the Highpoint Villa plan. Owners must realize that substantial authority will be vested with the appropriate Architectural Review Board (the "ARB") in determining the suitability of any design modifications submitted for construction in Highpoint.

- Building Requirements - The following general requirements must be met for homes constructed in Highpoint. Any deviations or additions must be approved by the appropriate ARB.

- Woodside Venture, LLC d/b/a Carolina Signature Homes or Woodside

- Venture, LLC d/b/a Showcase Homes by Charles Stanley are the approved builders for all homes in Highpoint.

- Height. Minimum plate heights of 9 feet are required.

- Exterior Brick. All homes will be constructed of brick and cement board siding combinations. Brick selections must be a queen-sized, sanded brick in earthtone colors. Specific approved selections include:

  - Shellmans Bluff by Cherokee Brick
  - Brookhaven by Cherokee Brick
  - Sierra by US Brick

Mortar will be Ivory Buff with white sand. Brick and/or mortar selections may be substituted with similar style and quality if required due to manufacturer changes in color, style, discontinuation, etc., but must be approved in writing by the appropriate ARB.

- Siding. Cement board siding and shakes by James Hardie® shall be required. Paint colors must generally be earthtones with bright colors avoided. Approved paint colors by Sherwin Williams® are as follows:

  - Siding: Debonair, Acacia Haze, City Scape, Gibraltar
  - Shakes: Stardew, Oyster Bay, Passive, Light French Gray
  - Trim: Creamy, Greek Villa, Westhighland White, Extra White

Use of other colors may be allowed but will require written ARB approval.

- Roofing. GAF® high-definition lifetime architectural roof shingles in Weathered Wood or similar color is required. The ARB may approve a substantially similar

style and quality if required due to manufacturer changes in color, style, discontinuations, etc. Accent roofing over short overhands or gable returns shall be copper or, if approved in writing by the ARB, metal standing seam.

- Windows. All windows shall be Andersen®100 series energy efficient, Low-E windows with SDL grids. Substitutions with another window by a different product/manufacturer of similar style and quality may be allowed only if approved in writing by the ARB.
- Garage Doors. Amarr® carriage-style garage doors with decorative straps and windows are required. Another product/manufacturer of similar style and quality may be allowed if approved in writing by the ARB.
- Driveways. Concrete driveways are required. Paver driveways or aprons may be approved by the ARB.
- Decks & Patios. Patios must be constructed of concrete with brick perimeters. No elevated or wooden decks are permitted unless required due to being 5 feet or more above grade, and only with prior written approval of the ARB.
- Retaining Walls. If retaining walls are required, only natural stone approved by the ARB may be used in the front and sides of homes. No segmental block walls will be allowed unless with the written approval of the ARB and must be located behind homes and not reasonably visible from adjoining homes or the street. The Developer may install natural stone retaining walls in locations deemed in its sole discretion to be necessary for proper management of grades and drainage. Any such walls installed by Developer will be owned and maintained by the Association.
- Exterior Lighting. Exterior lighting shall be approved by the ARB and should be in a similar style for all homes in Highpoint.
- Miscellaneous. Exterior fireplaces, outdoor barbecues and well-landscaped firepits are permitted with appropriate screening to be included on the plans and approved by the ARB.

Landscape

Landscape budgets in Highpoint must be a minimum of $18,000 per home.

Front and rear portions of the lot must be sodded with an approved grass consistent with that used in Woodside.

Homeowners are encouraged to include at least one street tree on landscape plans.

the Highpoint in The Reserve Neighborhood Association, Inc. (the “Association”) will be responsible for normal landscape maintenance, including mowing, edging, blowing, pruning, mulching, weed control and fertilization in accordance with an annual budget established by the Association and paid by Owners.

5.47 The Peninsula:

5.47.1 Lot Coverage: The first-floor enclosed area of the dwelling unit including garages, carports, screened and/or roof covered porches shall not exceed 35% of the area of the home site. Maximum total coverage to include decks, patios, walkways, driveways, pools and other improvements are not to exceed 50% of the total lot area.

5.47.2 Minimum Sq. Ft.: 1,800 heated sq. ft.

5.47.3 Minimum Setbacks:

- Front 25 ft.
- Rear 30 ft.
- Sides 10 ft.

Driveway minimum setback 2 feet from side property line.

5.47.4 Additional Requirements:

Home Construction

Building guidelines in The Peninsula encourage combinations of exterior building materials such as brick, stone, stucco and wood or cementitious siding. Building guidelines in The Peninsula limit the use of vinyl siding on homes. No vinyl siding will be permitted on the front or rear of homes except for gables (limited areas) and second story dormers, fascia and soffit. Vinyl shake siding may be approved for use in gables, dormers and as accents.

Landscape

Landscape budgets in The Peninsula must be a minimum of $20,000 per home. Front and rear portions of the lot must be sodded with an approved grass consistent with that used in Woodside.

Homeowners are required to include at least one street tree in a location consistent to create a “street tree” theme with other lots in The Peninsula, generally 10-15’ off the back of the curb. Varieties of Red Maple, including October Glory, Autumn Blaze, Red Sunset, and Brandywine are acceptable. Street trees, if included on a home site in The Peninsula, whether by the developer or the homeowner, must be maintained and replaced by the homeowner if damaged or dead.

Drainage

All Lots shall include 5-foot easements on each side of the lot line to ensure adequate drainage which conforms with neighboring property drainage patterns and systems. Such easement shall allow developer or the ARB to require site work to avoid unsightly and un-natural straight-line berms, ditches or other devices that strictly follow property lines.

Perimeter Fencing

Rights to install and maintain suitable perimeter fencing (i.e., 5’ high, no-climb) will be reserved on lots via an easement in favor of Reserve at Hollow Creek, LLC and WPPOA as shown on the record plat. In the event any such perimeter fencing is installed on the rear of any lot line which adjoins the Hollow Creek Land Preservation and its appurtenant walking trails, the Homeowner may install, at his sole expense, a gate for direct Homeowner access to the adjacent walking trail. Homeowners shall be responsible for maintenance of the gate and for ensuring that individuals not residing on the Lot do not access the gate.

5.48 Stonebridge Villas:

5.48.1 Home Design Philosophy

The homes of Stonebridge Villas are designed with an elegant, refined look with the goal of complementing the unique location adjacent to a preserved natural area with a running stream within the Stonebridge neighborhood. In order to create a consistent architectural appeal for this intimate neighborhood, the Developer has commissioned the Stonebridge Villa plan. Owners must realize that substantial authority will be vested with the Architectural Review Board (the "ARB") in determining the suitability of any design modifications submitted for construction in Stonebridge Villas. These requirements increase the cost of construction but are necessary to create a neighborhood of refinement, unique character, and natural beauty.

5.48.2 Building Requirements:

The following general requirements must be met for homes constructed in Stonebridge Villas. Any deviations or additions must be approved by the ARB.

- **Builder.** Woodside Venture, LLC d/b/a Carolina Signature Homes is the approved builder for all homes in Stonebridge Villas.

- **Height.** Minimum plate heights of 9 feet are required.

- **Exterior Brick.** All homes will be constructed of brick and cement board siding combinations. Brick selections must be a queen-sized, sanded brick in earth-tone colors. Brick and/or mortar selections must be approved in writing by the ARB.

- **Siding.** Cement board siding and shakes by James Hardie® shall be required. Paint colors must generally be earth tones, with bright colors avoided

- **Roofing.** GAF® high-definition lifetime architectural roof shingles in Weathered Wood or similar color are required. The ARB may approve a substantially similar style and quality if required due to manufacturer changes in color, style, discontinuations, etc. Metal roofing of the front porch and Garage entry shall be metal standing seam black or dark bronze in color.

- **Windows.** All windows shall be Andersen®100 series energy-efficient, Low-E windows with SDL grids. Substitutions with another window by a different product/manufacturer of similar style and quality may be allowed only if approved in writing by the ARB.

- **Garage Doors.** Amarr® carriage-style garage doors with decorative straps and windows are required. Another product/manufacturer of similar style and quality may be allowed if approved in writing by the ARB.

- **Driveways.** Concrete driveways are required. Paver driveways or aprons may be approved by the ARB.

- **Rear porch and decks.** Patios must be constructed with brick piers and Azek decking in earth-tone colors in the brown or gray family of colors.

- **Retaining Walls.** If retaining walls are required, only natural stone approved by the ARB may be used in the front and sides of homes. No segmental block walls will be allowed unless with the written approval of the ARB and must be located behind homes and not reasonably visible from adjoining homes or the street. The Developer may install natural stone retaining walls in

locations deemed in its sole discretion to be necessary for proper management of grades and drainage. Any such walls installed by Developer will be owned and maintained by the owner of the lot on which they are located.

- **Exterior Lighting.** Exterior lighting shall be approved by the ARB and should be in a similar style for all homes in Stonebridge Villas.

- **Miscellaneous.** Exterior fireplaces, outdoor barbecues, and well-landscaped firepits are permitted with appropriate screening to be included on the plans and approved by the ARB.

5.48.3 Landscape

The ARB must approve all landscape plans. The ARB may provide a preliminary approval for commencement of construction but reserves the right to approve or disapprove final landscape, as installed, as a result of deviation from approved plans, site conditions on the lot which are not apparent on the landscape plan, execution of the plan, drainage, and other conditions reasonably necessary to provide landscaping in keeping with the neighborhood. To the extent possible to allow for home construction, naturally existing trees, especially hardwoods, should be incorporated into the landscape and not removed. Any removal of trees outside of the home footprint must be approved in writing by the ARB before removal of such tree(s).

Landscape budgets in Stonebridge Villas must be a minimum of $21,000 per home. Front and rear portions of the lot must be sodded with an approved grass consistent with that used in Woodside. Shrubs, bushes, and trees must be placed around the home and on the lot to provide a natural setting consistent with Woodside's character. Areas which are not grassed should be covered with a natural ground cover such as pine straw or wood mulch (stone covers must be approved separately by the ARB before installation). Mulched or pine straw-ed areas should also have appropriate shrubs and ground covering plantings (vines, flowers, shrubs, ornamental grasses, etc.) in the beds, with a general requirement that at least one plant should be provided for a minimum of every 25 square feet. Homeowners are encouraged to include at least one street tree on landscape plans.

5.48.4 Drainage:

Homeowners and their Builder are responsible for proper management of stormwater drainage on their lot, whether discharging from the lot or entering onto the lot, both during and following construction of a home. Lots will include 5-foot easements on each side lot line, unless noted differently on the record plat, to ensure adequate drainage conforms with neighboring property. Storm drainage plans should adhere to all SCDES wetlands and storm water management practices, in a manner consistent with Woodside's drainage plan. Development staff are available to provide guidance and advice with respect to proper drainage practices and acceptable techniques to access the community drainage structures and systems. However, the Developer and/or POA are not responsible for proper storm water drainage on or from your lot.

Homeowners and their Builder's drainage plans should include the following:

- Proper grading of the site is essential to avoid excessive concentration of water runoff or collection, which may require significant remedial action after completion of home construction.

- Movement of water from the home site should be directed into the community's storm drainage system or natural drainage system.
- Homes should be placed at a height which will not allow for water collection in and around the foundation.
- On sloped areas, or primary stormwater paths, grasses or other substantially rooted planting should be used to prevent erosion and to slow the path of traveling water. Mulched areas, especially those without significant plantings, are extremely susceptible to water run-off issues.
- Berms, swales, French drains, collection devices, and other storm drainage management structures should be employed to manage the direction and flow of stormwater to prevent erosion, in a reasonable manner that does not create undue burden on a neighboring property and which results in an aesthetically reasonable outcome. Unusually long, unsightly, straight line artificial berms along property lines are to be avoided.
- Rip rap, stone diffusion devices are acceptable features to control erosion, but should be employed reasonably, in a way that does not unduly impact neighboring properties, either aesthetically or for stormwater control purposes.

Failure to address or adhere to proper stormwater management practices can result in substantial costs and replacement of landscaping after construction of your home.

5.48.5 <u>Other Structures:</u>

All hot tubs/Jacuzzis shall first be approved by the ARB and be completely screened from the view of the public. Submissions for hot tub and Jacuzzi approvals must include the plans for this screening before installation.

The ARB must approve all pools, fencing, and walls. See special addendum fences **Section 3.9** of the Building Guidelines.

5.48.5 <u>SQUARE FOOTAGE:</u>

Minimum Square Feet	1,750 heated sq. ft.

5.48.6 <u>MINIMUM SETBACKS FOR BUILDING STRUCTURES (GENERALLY)</u>

Front 25 ft.

Rear 5 ft.

Sides 10 ft.

*Lot 1 shall have a 5 ft. minimum setback on the left or southernmost boundary line and a 10 ft. minimum setback on the right or northernmost boundary line. Lot 5 shall have a 10 ft minimum setback on the left or southwestern most boundary line and a 5 ft. minimum setback on the right or northeastern most boundary line.

Driveway minimum setback 2 feet from side property line.

6 Appendixes:

A-1a - Curb Cut Application

A-1b – Curb Cut Specifications

A-1c – ARB Deposit Acknowledgment

A-2a - Real Estate Sign Post Information

A-2b – Realtor Sign Detail

A-2c – Re-Sale Platform Sign Detail

A-3 - New Construction Signs

A-4 – New Home Construction Site Plan and House Plan Checklist

A-5 – Checklist for Improvement Application

A-6 – Checklist for Pool Application

A-7 – Checklist for Fence Application

A-8 – Checklist for Landscape Plans

A-9 – Checklist for Variances

A-10 – Improvement Review Form

A-11 – New Construction Application

A-12 – Construction Modification Form

Woodside Plantation
Property Owners' Association

CURB CUT SPECIFICATIONS & DRIVEWAY IMPROVEMENTS

Please fill out the information below and initial page 2 of the attached documents. Additionally sign and return the Deposit Acknowledgement Form.

Date:_____ Name:_____

Address:_____

_____

Contractor {Business Name):_____

I acknowledge that I have received tile specifications regarding tile approved method for a curb cut from tile Property Owners' Association. Furthermore, I understand that if the curb cut is not done according to the requirements, I will be required to make the necessary correction in order for the driveway to meet the specifications. I understand that I am responsible for the action of my contractor.

* *I understand that there is a $500 refundable deposit due to* the *Property Owners Association before work on the curb cut for my property may commence. Any improvement work done to a resident's driveway which requires the utilization of a concrete truck and/or dumpster requires a $500 refundable deposit.*

Property Owners' Signature:_____

POA Signature:_____

* Please be aware that any deposits that are received by the POA-ARB are required to be deposited into POA funds to meet auditing requirements.

• 1411 Silver Bluff Road • Aiken, South Carolina 29803 •
• {803)641-9663 • Fax (803)641-1831 • E-mail: wppoa@wppoa.com •

Curb Cut Specifications Sheet

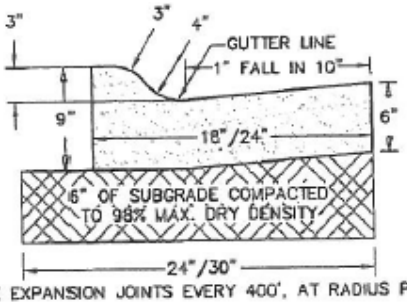

1. PLACE EXPANSION JOINTS EVERY 400', AT RADIUS POINTS, AND AT EACH TRAP LOCATION.
2. PLACE CONTRACTION JOINTS EVERY 10'
3. SUBGRADE MATERIAL SHALL BE COMPACTED TO 98% MAX. DRY DENSITY BEFORE PLACING OF CONCRETE CURB & GUTTER.
4. SUBBASE IS TO BE INSPECTED BY INSPECTOR BEFORE PLACING OF CURB.
5. CONCRETE SHALL CONFORM TO THE MINIMUM REQUIREMENTS FOR CLASS "B" CONCRETE.

18" ROLLED CONC. CURB & GUTTER (STANDARD)

(N.T.S.)

AS OF JUNE 2024, THE CONTOL JOINT IS PREFERRED BUT NO LONGER REQUIRED. THERE IS HOWEVER A REQUIREMENT THAT THERE IS A BREAK AWAY AT THE BACK OF THE CURB LINE.

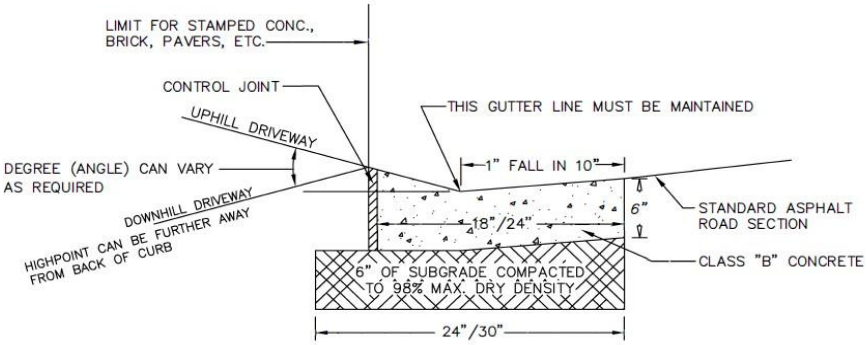

MODIFIED CONC. CURB & GUTTER AT DRIVEWAY

(NOT TO SCALE))

NOTE: THE CURB CUT IS SUBJECT TO ARB APPROVAL AND ADDITIONAL CHARGES UNLESS PROVIDED FOR IN YOUR BUILDING CONTRACT.

Street Guter Obstructions & Curb Cutting

The gutter is a part of the street and belongs to either the Development Company or Property Owners Association. No modification or alteration can be made to the curb or street without permission of the appropriate ARB. Any filling of the gutter with concrete, asphalt or other permanent material is not permitted. It is important that the water flows to the storm drain. It is also important not to cause water to come onto your driveway.

Stamped concrete driveway entrances, pavers, and other post construction modifications to driveway entrances require ARB approval. These fashion/style features must end at the back side of the curb.

To accommodate people who want to provide a smoother transition from the street to the driveway, the ARBs will take requests from homeowners and provide an approved construction detail of the procedure for curb cutting while keeping the integrity of the gutter.

Please be aware that the usage of temporary materials, such as, but not limited to bricks, boards, sand, grates, etc., to mitigate the curb are not permitted. The POA will require immediate removal upon knowledge of the infraction.

Initial for Acknowledgment_____

Lot #_____

Woodside Plantation
Property Owners' Association
ARB Deposit Acknowledgement

Deposits are charged to help ensure that work that impacts neighborhoods is completed on time and proper clean up and/or repair of any damages is accomplished. In general, deposits are required but not limited to; improvements that require a dumpster, cement truck, extensive time or change to the appearance of the exterior of the property, large-scale landscaping and extended "PODS" placement. The deposit fee schedule is subject to change.

Deposits are refunded, upon written request, after a final inspection is completed and approved by the appropriate ARB chairperson. Please allow a minimum of 30 days from the date of written notice to receive your deposit refund check.

All deposits must be processed and deposited into a WPPOA bank account to meet auditing requirements. If a credit card is used to pay for a deposit, please understand that your deposit refund will be issued by **check** and the credit card fees associated with the transaction are not included in the refund of your deposit.

Your ARB improvement approval is good for one year from the date of notification. No work may commence until the deposit is received and final approval is given. You may request an extension of your approval period through the POA-ARB.

If you understand that your project will require a deposit, please remit payment to the WPPOA and acknowledge the below disclosures.

I understand that it is the property owner's sole responsibility to request a refund of the deposit in writing, upon completion of the improvement. (email Harley Williams at harley@wppoa.com)

I understand the WPPOA has the right to retain my deposit, or a portion thereof, for damages and/or failure to meet the Building & Landscape Guidelines and Covenants.

I understand that if I fail to request the refund of my deposit back within one year of deposit date; without an approved extension request, my deposit will be forfeited to the WPPOA.

Deposit Amount:_____For What?_____

Property Owner Name(s):_____

Woodside Address:_____

Contact # or Email:_____

Signature:_____Date:_____

• *1411 Silver Bluff Road • Aiken, South Carolina 29803* •
• *(803)641-9663* • *Fax (803)641-1831* • *E-mail: wppoa@wppoa.com* •

A-2a - Real Estate Sign Post Information

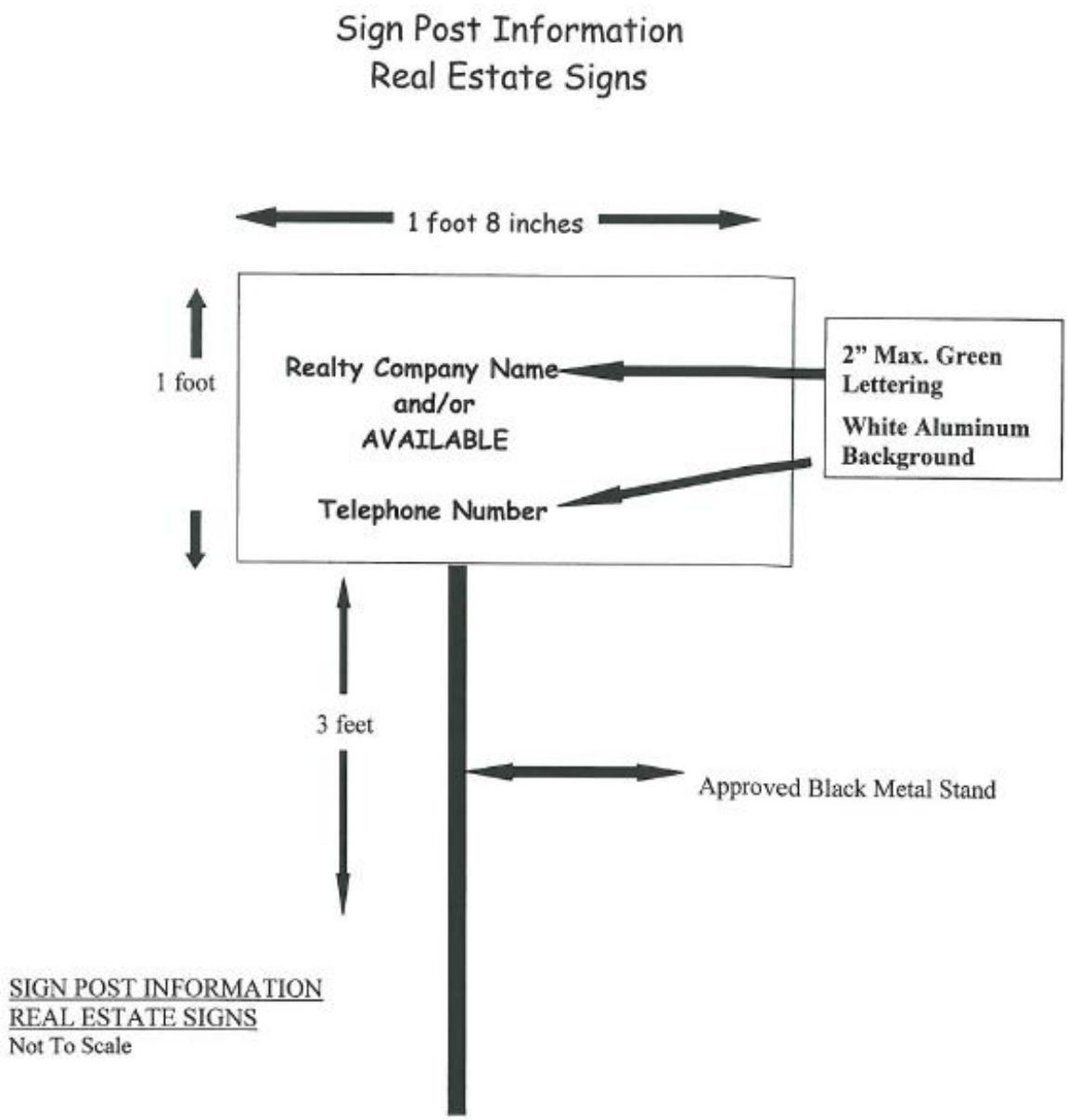

DRAWING A-2

A-2b - Realtor Sign Post Information

Centerline nylon bracket with center screw

A-2c - Real Estate Platform Sign Post

MATERIALS:

- Pressure treated pinewood post - 4' x 4' x 42"
- Pressure treated pinewood mounting board - 28" x 11" x 3/4"
- Six (6) stainless steel machine bolts and nuts - 6/32 x 1
- 28" x 11" x 1/16" Plexiglas cover

COLOR: Cabot Semi-transparent Stain –Shale Gray

DIMENSIONS:

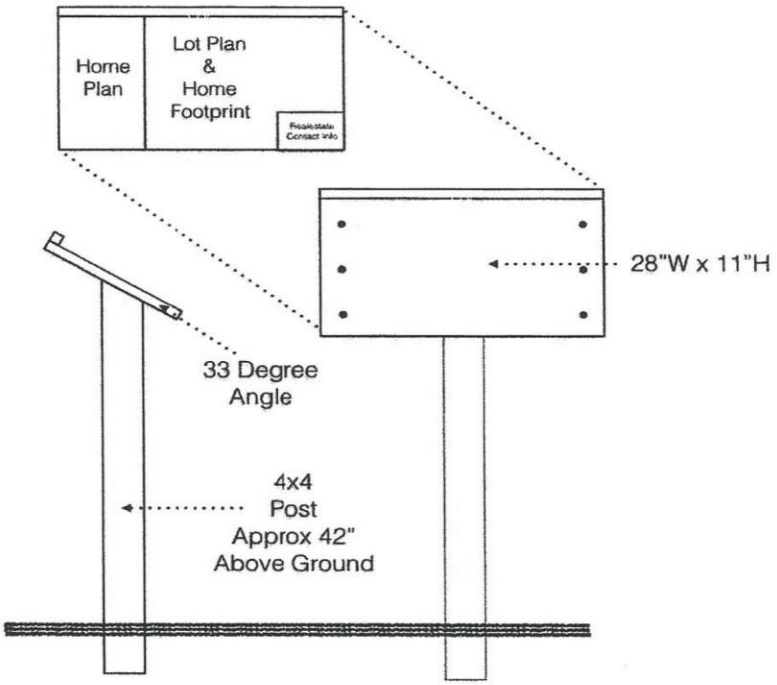

A-3 – New Construction Sign

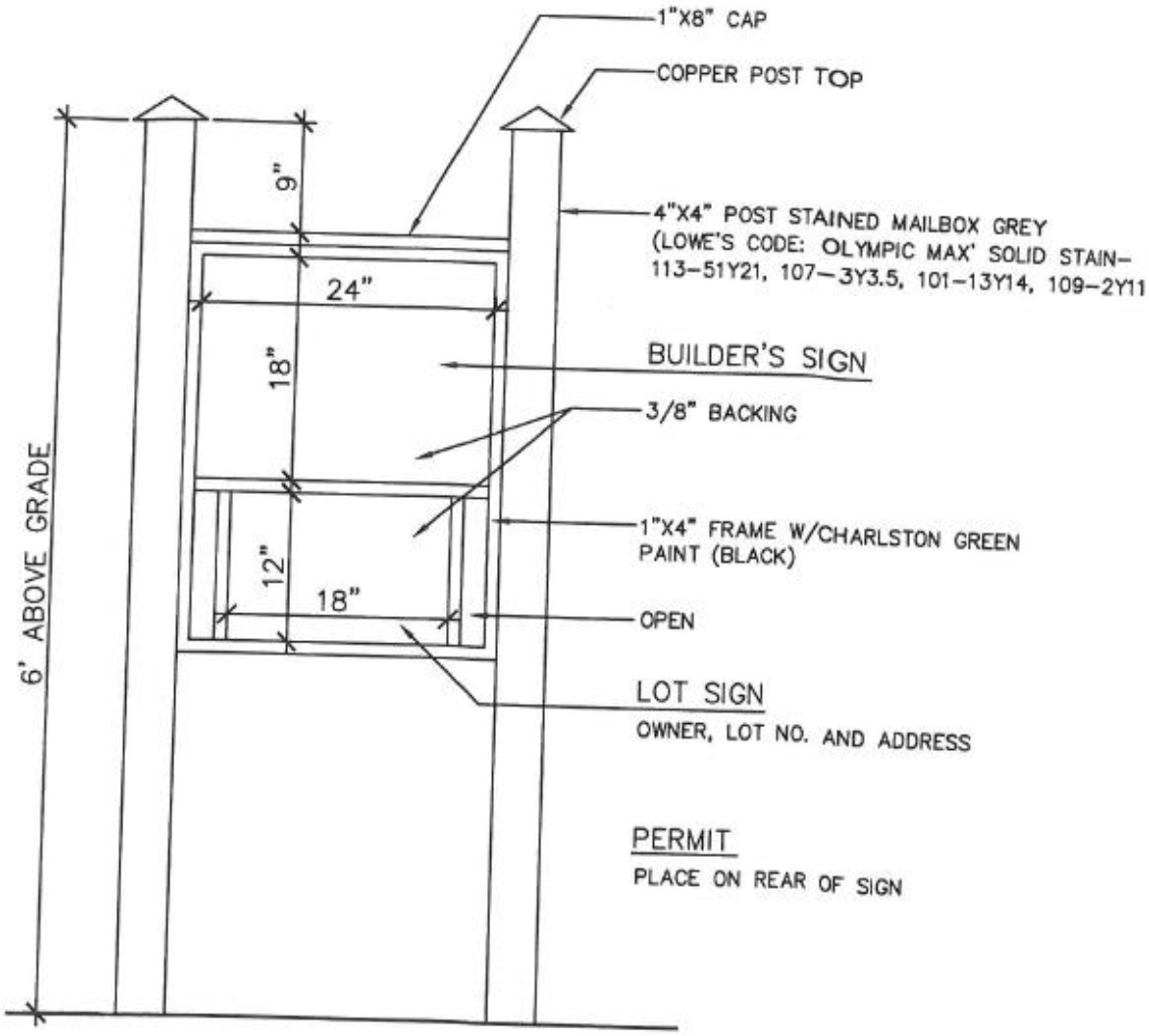

NEW CONSTRUCTION SIGN
SCALE: 1"=1'–0"

Drawing A-3
Appendix A: Drawings
revised: OCTOBER 2012

A- 4 New Home Construction Site Plan and House Plan Checklist

(Refer to Section 2.1 of Building and Landscape Guidelines)

No.	Item	Submitted
1	New Construction Application, Deposit, and Agreement Form (Appendix A-11)	
2	A site plan with Title Block identifying Builder, Name of Property Owner, Street Address, and Lot/Phase number	
3	Entire lot shown with all boundary information, contours and dimensions drawn at a 1” =10’ scale on a plan sheet of 24” x 36”?	
4	Street names and golf course/lakes shown and labeled	
5	North arrow shown	
6	All building minimum setback lines, front, rear, side yard and golf course/lake	
7	Location of existing and proposed easements, wetlands and common area buffers and any prominent natural features	
8	Location of footprint of new structure with proposed setback dimensions from closest part of building to all property lines	
9	Location of all walkways, patios, decks, driveways and street curb line	
10	Location of Service yard areas and items contained within	
11	Trash storage shall be indicated on plan (in garage or in solid enclosure)	
12	Locations of pools, outdoor fireplaces, arbors, pergolas or similar outdoor features including location of HVAC units, electric and gas meters, generators, etc. shown and labeled	
13	Location of drainage inlets, pipes, swales, berms and storm water control measures, including proposed water flow direction. Roof leader drains and piping shall be shown	
14	Soil erosion and sediment control measures, including silt fence locations, stockpile areas, and temporary gravel driveways shown and labeled	
15	All trees or tree areas to be protected shown and any natural areas to remain clearly marked	
16	Locations and species of all trees equal to or greater than four inches, four feet above ground within 25 feet of a proposed structure, indication with (X) of trees to be removed	

17	Lot Calculations Chart on Site Plan with “Required and Proposed” Area Calculations including: A. Roofed building footprint (heated and unheated) (sf) B. Unroofed above ground decks/stairs/porch (sf) C. Total A + B (sf) D. Driveway, walks, pool, ground level patios, etc. (impervious coverage) (sf) E. Total of C + D F. Total lot area (sf) G. % Building footprint coverage (C/F) H. % Improvement (impervious) area (E/F)	
	House Plans	
18	The exterior elevations of all four sides of house show at a ¼” = 1’ scale? Final grade, main floor, garage, roof pitch, wall materials, shutters, window trim, shingles, crawl space doors, etc. included.	
19	Interior Floor Plans submitted, drawn at a ¼” = 1’ scale	
20	Include all color samples for siding, trim, shutters, stucco, lattice, stone, brick, and shingles	
21	Include a digital copy of plans Include a scale paper set for presentation to the ARB	
22	Submission fee and New Construction deposit paid	

_____

Signed by Applicant

A-5 – Checklist for Property Improvements and Alterations

(Refer to Section 3 of Building and Landscape Guidelines)

No.	Item	Submitted
1	Submittal of Improvement Review Form (Appendix A-10)	
2	A site plan with a Title Block identifying Builder, Name of Property Owner, Street Address, and Lot/Phase number, adjacent golf course, lake or open space	
3	Entire lot shown with all boundary information and dimensions	
4	Location of all existing and proposed easements, wetlands and common area buffers and any prominent natural features	
5	Required front, rear and side yard and golf course/lake setback lines	
6	A Site Plan showing the minimum building setbacks with the intended improvements with dimensions to all property lines	
7	Building elevation(s) that define, illustrate and explain the proposed improvements	
8	Materials and applicable color samples for proposed improvements; such as, siding, trim, stucco, lattice, stone, brick, and shingles	
9	Submit calculations of any increase in impervious surfaces. Update coverage requirement calculation.	
10	Submittal of a set of paper plans	
11	If required, a deposit paid	

_____

Signed by Applicant

A-6 – Checklist for Pool Application

(Refer to Section 1.4.3 of Building and Landscape Guidelines)

No.	Item	Submitted
1	Submittal of a Plot Plan with Title Block labeled with identifying street address, Lot and Phase numbers and Owner's Name	
2	Entire lot shown with all boundary information and dimensions	
3	Required front, rear and side yard and golf course minimum setback lines	
4	Location of all existing and proposed easements, wetlands and common area buffers and any prominent natural features	
5	Location and dimensions of proposed pool and surrounding decking with proposed setback dimensions from closest part of pool to adjacent property lines	
6	Location and width of proposed walkway around pool	
7	Location of pool equipment	
8	Location of Fence surrounding pool to be 4' in height with 4" maximum spacing of pickets in conformance to City of Aiken Building Codes.	
9	Area of all existing surfaces shall be submitted along with area of proposed pool and new walkways for lot coverage requirement. Update coverage requirement calculation.	
10	A list of materials and applicable color samples for pool and decking/walkways	
11	A landscape plan is required	
12	Submittal of two sets of plans	
13	If required, Payment of Deposit	

_____

Signed by Applicant

A-7 – Checklist for Fence Application

(Refer to Section 1.4.9 of Building and Landscape Guidelines)

No.	Item	Submitted
1	Submit an Improvement Review Form (Appendix A-10)	
2	Submit a Site Plan with a Title block with identifying street address, Lot and Phase numbers and Owner's Name	
3	Entire lot shown with all boundary information and dimensions	
4	Required front, rear and side yard and golf course minimum setback lines	
5	Location of all existing and proposed easements, wetlands and common area buffers and any prominent natural features	
6	Location and dimensions of proposed fence with proposed setback dimensions from closest part of fence to adjacent property lines	
7	Indicate fence style, materials and color	
8	Indicate fence setbacks – 20' rear setback to lake or golf course 10' side setback to lake or golf course 1' minimum to non-lake or non-golf course	
9	Indicate fence height (maximum of five (5) feet); 6'max. on Development perimeter	
10	Fences must provide a minimum of 50% open space; can be solid on Development perimeter	
11	Attractive side of fence must face outward; except on Development perimeter	
12	Written agreement from adjacent lot owner if proposed to be tied into an existing fence	
13	Submittal of two sets of plans	
14	If required, Payment of Deposit	

_____

Signed by Applicant

A-8 – Checklist for Landscape Plans

(Refer to Section 1.7 of Building and Landscape Guidelines)

No.	Item	Submitted
1	Submit an Improvement Review Form (Appendix A-10)	
2	Submit a Site Plan with a Title block with identifying street address, Lot and Phase numbers and Owner's Name and a north arrow	
3	Submit a plan showing the entire lot shown with all boundary information and dimensions drawn at a scale (1" =10') on a plan sheet of 24" x 36", if possible	
4	The plan shows street curbline, sidewalk and golf course/lakes.	
5	The plan shows the location of footprint of house, walkways, driveways, pools and patios	
6	If part of this plan, fences, pools, pool equipment, decks, patios, outdoor fireplaces, kitchens, arbors, pergolas, walls or similar outdoor features are shown in relationship to the building setback	
7	The plan shows all utilities, including electric transformers and meters, gas meters, telephone, cable, water heater and HVAC	
8	The plan shows the location of drainage inlets, pipes, swales, berms and storm water control measures, including proposed water flow direction.	
9	The plan shows the locations of all existing trees to be saved	
10	If applicable, sodding and landscaping within 20 feet of the golf course are in general conformity with the overall landscaping pattern of the fairway area.	
11	In the plan, slopes with sod are not steeper than 2 feet horizontal to 1 foot vertical (2:1) and slopes with vegetation or pine straw or mulch do not exceed 3 feet horizontal to 1 foot vertical (3:1).	
12	The plan has a legend of planting materials, showing installed size, common name, variety, quantity and mature height.	
13	Ground cover plantings, pine straw, mulch, bark or other acceptable materials are placed on all areas not covered by sod and are clearly labelled on the plan.	
14	Mulch or pine straw beds should also have appropriate shrubs and ground covering plantings in the beds, with a general requirement that at least one plant should be provided for every 25 square feet of bed.	
15	The plan uses standard plant symbols to represent existing and proposed plant material. All plant material is shown at the proposed spacing with the diameter of the symbol being the **mature width** of the proposed plant.	

16	The plan identifies the location and extent of brick, stones, gravel, pebbles, lava rocks, pavers and other inorganic materials and samples of size and color have been provided to the ARB. White crushed stone is not being used as a ground cover. The proposed material does not predominate over the use of organic plant materials.	
17	Have all HVAC, generators, and hot water heating units been screened with minimum 7 gallon evergreen plant material that will screen the units completely in one year	
18	Utility boxes at the street curb are screened with at least 3 spreading evergreen plants that are 2 feet high at planting and provide a 5 foot clearance around the entire box.	
19	For proper line of sight and safety, shrubs and ground plantings installed within 10 feet of the curb are no higher than 2 feet at maturity.	
20	The plan shows the design and site location of all exterior stand-alone lighting fixtures utilized to illuminate driveways, walks, entries and landscape features. Fixtures specifications have been attached to the plan.	

_____

Signed by Applicant

B-8 – Checklist for Drainage Plans

(Refer to Section 2.6.3 of Building and Landscape Guidelines)

No.	Item	Submitted
1	Submit a Site Plan with a Title block with identifying street address, Lot and Phase numbers and Owner's Name and a north arrow	
2	Drainage plans shall be drawn on a 24" x 36" sheet, preferably mapped over the approved final landscape plan, to a scale of 1" = 10'	
3	Show the flow of water over the property	
4	Show all soil erosion measures and storm water control measures, structures etc.	
5	Show all swales, berms, retaining walls, catch basins, French drains, rip-rap, and any other formations used to direct water shown on the plan	
6	Show all locations and sizes of installed or proposed piping	
7	If required, Payment of Deposit	

_____

Signed by Applicant

A-9 – Checklist for Variance

(Refer to Section 1.6 of Building and Landscape Guidelines)

No.	Item	Submitted
1	Submit an application for Variance	
2	Submit the specific and detailed measurements of the variance request	
3	Is there any alternative location or movement of the project scope within the appropriate setbacks that would ultimately achieve project success? (would not require a variance)	
4	Will granting this variance cause any potential impact on adjacent properties?	
5	Will not granting this variance inflict any physical or topographic hardship (not personal). If YES, provide explanation.	
6	Would the approval of this variance result in the removal of valuable or substantial natural vegetation?	
7	If adjacent to a golf club, the respective golf course management must agree to the variance.	

_____

Signed by Applicant

Lot#·

	A-10	Improvement Review Form	The POA-ARB meets on the first & third Mondays of each month. Submissions (including samples, materials and pictures) are due no later than noon the Wednesday before the meeting is scheduled in order to make the agenda.

General Information	Some submissions may be subject to a refundable deposit and/or non-refundable submission fee.
Property Owner:	Please use the following check list to ensure a complete submission and avoid delays in review. *Please use the Building and Landscaping Guidelines (BLG}to determine submission requirements.*
Woodside Address:	Is a site plan required and/or attached? D
	Are adequate color/material sample(s) provided? (pictures are acceptable) D
	Are elevations attached if needed? D
Phone#:	Are reference pictures attached? D
Email:	Will there be a dumpster, pod or port-o-let on site? D
	Are there any trees to be removed? D If yes, please list how many and what kind in description box. *(Please reference tree removal section in the BLG)*

Please select one of the below options for improvement & use the description box to explain your submission in detail.

☐ FENCE ☐ POOL ☐ SUN ROOM/SCREEN ROOM ☐ HOME ADDITION ☐ LANDSCAPING ☐ COLOR CHANGE ☐ DRIVEWAY ☐ FIREPIT ☐ OTHER

DETAILED DESCRIPTION OF PROJECT				
Contractor/Vendor Information	Name:	Phone#:	Email:	
Compliance with the approved plan as described, as well as any city/county permits required are the sole responsibility of the property owner. ***Approvals are valid for one year from the date of notification.***				
Property Owner Signature:	**Date:**	Signature of ARB Representative:	Date:	Decision Stamp:
Comments:				

A-11 NEW CONSTRUCTION APPLICATION, DEPOSIT & AGREEMENT

General Information

Project Address: _____ Lot#:

Property Owner:

Contractor: _____

Phone#: _____

ARB NEW CONSTRUCTION APPROVALS ARE GOOD FOR ONE YEAR, INCLDUDING LANDSCAPING.

Additional time, if needed, must be approved by the ARB.

Comments: ____

FOR OFFICE USE

ARB Approval:

ARB Signature: DATE:

Exterior Material Description

MATERIAL	MANUFACTURER	COLOR/NO.
Brick:		
Mortar:		
Stone:		
Siding:		
Shakes:		
Stucco:		
Soffit/Facia:		
Gutters:		
Columns:		
Trim:		
Roofing:		
Shutter:		
Windows:		
Front Door:		
Garage Door:		

CHECKLIST	
Lot stake out?	
Trees to be saved marked on site plan & lot?	
Color selections & samples provided?	
Digital full set to ARB?	
Fee & deposit paid?	
Marked up site plan to ARB?	

One full scale set of plans must be presented to the ARB. Only the site plan must be retained unless otherwise requested.

REQUIRED AREA CALCULATIONS	
A. Roofed building footprint (heated & unheated)	
B. Unroofed first floor decks, stairs, porch, patio	
C. Total of A. & B.	
D. Driveway, walks, pool, ground level patios, etc.	
E. Total of C. & D.	
F. Total Lot Area =	
G. % Footprint coverage (C divided by F) see section 9	
H. % Improvement area (max 50%) (E divided by F)	

I, _____ as contractor for the above described construction project, acknowledge and agree that the deposit is being held by Woodside Plantation Owners Association in order to insure that the improvements will be constructed in accordance with plans and specifications which have been approved by the Architectural Review Board.

I **further acknowledge and agree that:**

1. I have read and understand the Covenants and Restrictions applicable to the property and Architectural Review Board Guidelines and will follow and obey the said Covenants, Restriction and Guidelines.
2. I am responsible for completing the project as described by the drawings and specifications approved by the Board.
3. I will maintain a clean construction site at all times and install a job sign, commercial dumpster, and job toilet in conformance with ARB Guidelines.
4. I am responsible for the conduct of all workers performing services on this project at all times while they are engaged by us.
5. I understand that when accepting a construction pass to enter Woodside Plantation, all workers and vehicles are subject to be searched to help prevent theft of materials and equipment. The pass is valid only for travel from the gate to the construction site.
6. I understand that the deposit shall be returned within 31 days after final inspection approval and landscaping has been installed and approved. Any monies paid out by the Property Owners' ARB for the correction of changes not approved by the Board or the costs of work necessary to improve the of untidy sites, or the cost to repair any damage to the road right-of-way's, roads, road shoulders, or utilities, will be deducted from the deposit.
7. The deposit will be returned when the work is satisfactorily completed and if the contractor/owner is in good standing with the Association. If not, any fees, fines and other costs will be deducted from the deposit and the balance refunded

This application, Deposit, and Agreement made this _____ day of _____ 20____ by _____.Deposit Amount _____ __

A – 12 Construction Modification Request

Property Owner:_____ Builder:_____

Woodside Address: _____ Lot #:_____

Modification to:	Please check all that apply.
Site Plan	
Front Elevation	
Rear Elevation	
Left Elevation	
Right Elevation	
Color	
Materials	
Other (pool, fence, hot tubs, etc.)	
Landscaping	

Please explain the modification: _____

_____

_____

_____

_____

_____

_____

_____

_____

Revision#:.....

Revision numbers must corollate on the site plan or landscape plan submitted for the revision.

For Use by The ARB Only	
Approval Date:	Comments:
ARB Representative Signature:	